GRAND HAVEN PROFESSIONAL CENTER

Timber View Major PUD Amendment

Clear Form

Print

GRAND HAVEN CHARTER TOWNSHIP

PLANNED UNIT DEVELOPMENT (PUD) AMENDMENT APPLICATION

Application Type	Fee	Escrow*
PUD Amendment	$125	$500

Sewer Escrow**	
Main Extension	$5,000
Lift Station	$2,000

Applicant Information

Name: Hudsonville Professional Center, LLC - Bradley A Dykstra, DDS

Phone: (616) 405-0943 Fax: N/A

Address: 3250 Central Blvd., Hudsonville, Michigan 49426

Email Address: drdykstra@hudsonvilledental.com

Owner Information *(If different from applicant)*

Name: Same as applicant

Phone: Fax:

Address:

Property Information

Address/Location: 15018 172nd Avenue, Grand Haven, Michigan 49417

Parcel Number: 70 - 03 - 33 - 200 - 072 Size *(acres)*: 2.38 acres

Current Zoning: PUD (Timber View PUD) Zoning Requested: N/A

Adjacent Zoning: *North*: PUD *South*: RR *East*: PUD *West*: PUD

Master-Planned Zoning: Office/Service Consistent with Master Plan? Yes

Other Information

Does Property Abut Township Border? No

Present Use of the Subject Property? Vacant

Number & Type of Existing Structures? None

Subject Property Located on a Paved Road? Yes

Municipal Water within 2,700 Feet of Subject Property? Yes

Municipal Sewer within 2,700 Feet of Subject Property? Yes

NOTE: The architect, engineer, planner, or designer shall be responsible for utilizing the Township Ordinance Books and following the procedures and requirements as specified in Chapters 17 and 23 (*and Chapter 15A if located in the Overlay Zone*), and any other applicable ordinances. Initially, submit five copies of the required information for staff review. Once staff has granted tentative approval, additional copies will be required as requested by staff.

I hereby attest the information on this application is, to the best of my knowledge, true and accurate.

Signature of applicant *Date* 5-21-2018

Last Revised 2/8/2016

** To cover cost of legal and consulting fees, may be increased as necessary*

*** If approval of this application requires/includes the extension of a municipal sanitary sewer main, an additional $5,000.00 escrow fee shall be required, and an additional $2,000.00 escrow fee shall be required for the installation of a lift station.*

NOTICE

IF I PLAN TO SPLIT THE PARCEL(S) AFTER THE ZONING APPROVALS ARE GRANTED, I REALIZE THAT I MUST APPLY FOR A LAND DIVISION WITH THE ASSESSING DEPARTMENT. ALL LAND DIVISION REQUIREMENTS MUST BE CONFORMED TO BEFORE PROCEEDING WITH FURTHER DEVELOPMENT.

_____ 5-21-2018
Signature of Applicant *Date*

For Office Use Only

Date Received _____ Fee Paid? _____

Materials Received: Site Plans _____ Location Map _____

Survey _____ Legal Description _____

Dated copy of approved minutes sent to applicant? _____ Date Sent _____

PLANNING COMMISSION USE ONLY

Approval _____

Tabled _____

Denied _____

Conditional Approval _____

The following conditions shall be met for approval:

_____

_____

_____

_____

_____

_____

_____ _____
Signature of Planning Commission Chair *Date*

PROJECT LOCATION MAP
Grand Haven Professional Center

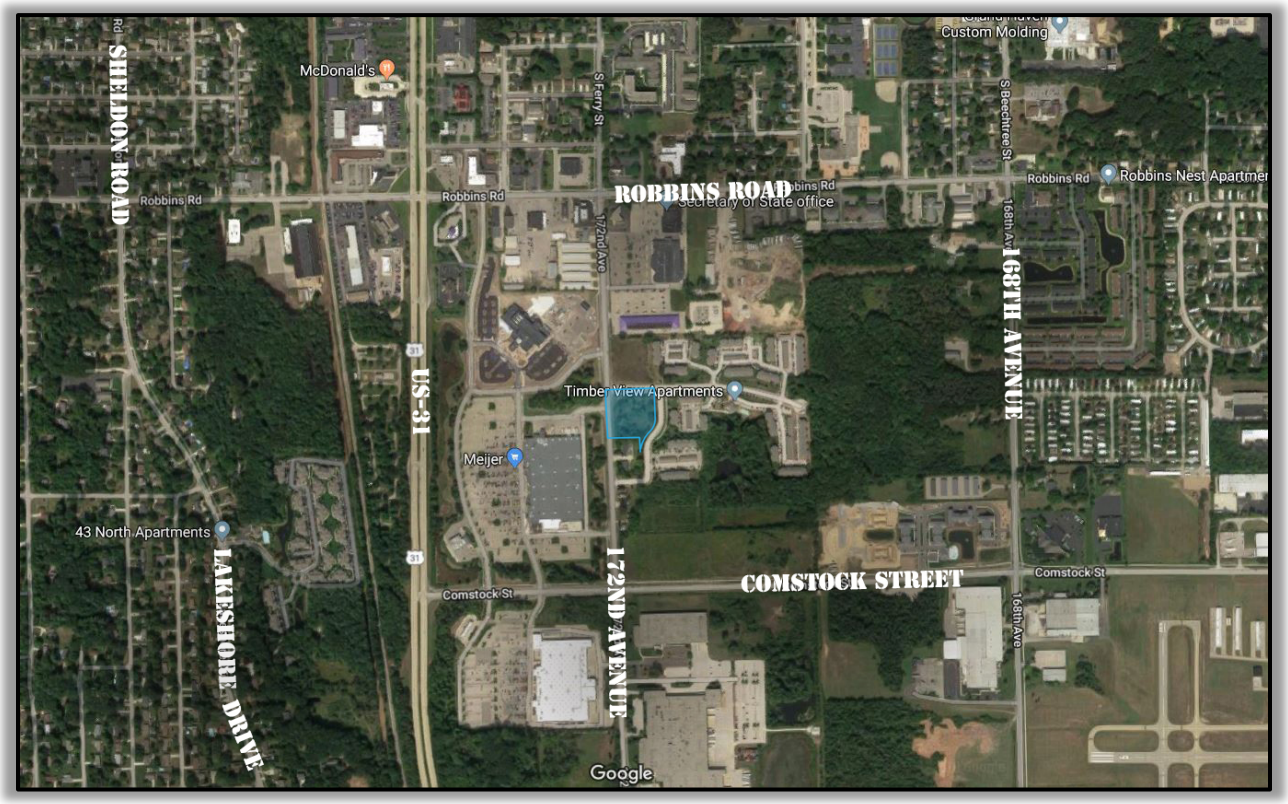

PARCEL DESCRIPTION
Grand Haven Professional Center

15018 172nd AVENUE **70-03-33-200-072**

PART OF NE 1/4 COM S 01D 40M 35S E 1307.51 FT FROM N 1/4 COR, TH N 88D 55M 39S E 322.52 FT ALG N LI OF SW 1/4 OF NE 1/4, TH S 01D 40M 35S E 205.24 FT, TH SW'LY 103.29 FT ALG A 117 FT RAD CURVE TO RIGHT (CH BEARS S 23D 36M 49S W 99.96 FT), TH SW'LY 42.93 FT ALG 183 FT RAD CURVE TO LEFT (CHD BEARS S 42D 10M 57S W 42.83 FT), TH S 89D 01M 03S W 250.13 FT ALG S LI OF N 1/2 OF NW 1/4 OF SW 1/4 OF NE 1/4, TH N 01D 40M 35S W 326.88 FT ALG N&S 1/4 LI TO BEG, ALSO PART OF SW 1/4 OF NE 1/4 COM CEN 1/4 COR, TH N 01D 23M 52S W 980.67 FT ALG N&S 1/4 LI, TH N 89D 17M 55S E 213.02 FT TO PT OF BEG, TH N 89D 17M 55S E 37.16 FT, TH SW'LY 118.65 FT ALG W'LY R/W LI OF DUNE VIEW AVE ON A 183 FT RAD CURVE TO LEFT (CHD BEARS S 17D 10M 35S W 116.58 FT), TH N 01D 23M 52S W 110.96 FT TO BEG. SEC 33 T8N R16W

PROPERTY OWNERSHIP INFORMATION
Grand Haven Professional Center

Parcel Identification	
Parcel Number:	70-03-33-200-072
Property Address:	15018 172ND AVE
Property Status:	ACTIVE
Government Unit:	16 - GRAND HAVEN TOWNSHIP
Taxing Unit:	16 - GRAND HAVEN TOWNSHIP

Owner Identification	
Owner Name 1:	HUDSONVILLE PROFESSIONAL CENTER LLC
Owner Name 2:	
Mailing Address:	3250 CENTRAL BLVD HUDSONVILLE, MI 49426
Local Unit Update:	05/01/2018

NARRATIVE
Grand Haven Professional Center

The proposed Grand Haven Professional Center PUD Amendment rests on a 1.69 acre site and will consist of a dental office and potential medical office (the use of the lease space is unknown at this time). The proposed entrance will come from Timberview Drive and will meet local and county standards. Existing pedestrian sidewalk on the north part of the site along Timberview Drive connects 172nd on the west to the Timber View Apartments on the east.

The main level of the building will include 5,116 s.f. for Dr. Dykstra's suite and 4,546 s.f. dedicated to lease space for a total of 9,662 s.f. The upper floor will provide Dr. Dykstra's suite an additional 2,822 s.f. and another 2,423 s.f. for lease.

The office(s) will operate during regular business hours and proper scheduling and operations will prevent any severe concentration of population from causing any issues on or near the site.

Parking for the building has been provided based on precedents and typical ordinance requirements (for dental and medical offices). The proposed parking does not meet current ordinance requirements for this use, which states that one parking space be provided per 100 gross floor area. The owner intends to provide as much parking as possible on this site and has planned for deferred parking once the building is filled/leased. A total of 82 spaces will be provided.

Existing trees cover most of the site, so there will be significant removal in order to accommodate the building and parking. However, the vegetative quality is somewhat poor on site, so the proposed improvements will enhance the aesthetics and overall presence at the corner. In an effort to minimize grading to the south of the building, existing tree stands will remain and provide adequate buffer from the south adjacent properties.

A storm lateral was stubbed to the site during overall PUD development of Timber View Apartment Community plans; calculations by Nederveld in 2001-2003 show this property was included in the overall drainage plan for the PUD and is accounted for in the existing detention basin for the development. Still, these plans incorporate leaching basins and perforated pipe to promote infiltration into the soil. This provides for pre-treatment of the stormwater before discharge to the provided storm lateral and is in accordance with the Township and Ottawa County Water Resources regulations.

Construction of the project would commence this fall if possible; otherwise it will start in early spring and be completed in late 2019.

List of Departures

- The proposed building is approximately 5-6’ from the west proposed ROW; it is over 32’ from the existing ROW. Due to the building size and required parking counts, the setback from the new ROW is not practical or desirable for site design. We are requesting a reduced setback as a result of the required wider ROW.

- The proposed building includes 9,662 square feet on the first floor and 5,245 on the second floor for a gross floor area of 14,907 square feet. The Zoning Ordinance states a dental/medical office requires 1 space per 100 GFA, thus the project requires 149 parking spaces. We are proposing 66 spaces with 16 deferred for a total of 82 spaces. We are requesting a departure on the required number of spaces.

- The parking spaces on the east side encroach the side yard setback by 9’. We are requesting a reduced setback to accommodate the required parking. There is still sufficient planting area for proposed screening and buffer.

- The dumpster enclosure encroaches the side yard setback. The dumpsters are placed in the ideal location of the site, away from the busier streets and on the rear of the building. We are requesting a reduced setback to accommodate the enclosure. Doing so, we intend to screen the enclosure with evergreen trees.

- The proposed ground sign is located at the northwest corner of the site, which is the ideal location for visibility from 172nd Ave. and Timberview Drive. Due to site constraints, the sign is located 8’ from the north property line and 10’ from the new ROW, which means that it is encroaching the required 15’ from property lines. We are requesting a reduced setback in order to locate the sign in this area.

- The proposed ground sign has a digital message board 15 sq. ft., which is 37.5% of the overall 40 sq. ft. sign. The allowed size for a digital message board is 12 sq. ft. and 25% of overall size of sign. We are requesting a departure from the allowable size.

STORM WATER MANAGEMENT SUMMARY

for

Grand Haven Professional Center
Timberview PUD
15018 172nd Avenue, Hudsonville, MI

Section 33, Grand Haven Township, Ottawa County, Michigan

July 19, 2018
Project Number 16201809

Prepared By:

NEDERVELD

217 Grandville Ave. SW, Suite 302 • Grand Rapids, MI 49503 • P. 616.575.5190 • F. 616.575.6644
Ann Arbor • Chicago• Columbus • Grand Rapids • Holland • Indianapolis • St. Louis

www.nederveld.com

SUMMARY

Hudsonville Professional Center, LLC is proposing to build a 9,662 (Main Floor) square foot building and related parking on vacant property located at the southeast corner of Timberview Drive and 172nd Avenue in Grand Haven Township, Ottawa County, Michigan. A storm lateral was stubbed to this site during overall PUD development of Timber View Apartment Community plans and calculations by our office in 2001 – 2003 show this property was included in the overall drainage plan for the PUD and is accounted for in the existing detention basin for the development.

The plans submitted incorporate leaching basins and perforated pipe to promote infiltration into the soil. This provides for pre-treatment of the stormwater before discharge to the provided storm lateral and is in accordance with Township and Ottawa County Water Resources rules.

Based on the attached plans, the above narrative, and the email from Dennis Cole, P.E. of Ottawa County Water Resources Commission granting conceptual approval, we request Township approval for the proposed improvements.

July 10, 2017 email correspondence from Dennis Cole, P.E.

Good morning, Kyle:

Having reviewed the Timber View Apartment Community plans and calcs from 2001-'03, it's clear the commercial property now under consideration as the Grand Haven Professional Center was accommodated by the overall storm water management design. For that reason, we would recommend conceptual approval for the plans dated June 4, 2018.

However, in accordance with Stacey Fedewa's comments, recognizing changes in both the Township's and our approach toward pre-treatment, we would strongly encourage revising the plans before final approval is granted to provide on-site infiltration wherever practicable. Existing and proposed storm sewers may certainly be used to handle events greater than the 2-year storm. Let me know if you have any questions.

Dennis R. Cole, PE, LEED® AP
Civil Engineer | County of Ottawa | Office of the Water Resources Commissioner
12220 Fillmore | Room 141 | West Olive, MI 49460
dcole@miottawa.org | d 616.994.4523 | f 616.994.4529
www.miOttawa.org/Departments/Drain/

NORTH ELEVATION

SOUTH ELEVATION SIMILAR BUT
ALL VINYL SIDING WITHOUT STONE

SCALE: 3/16"= 1'-0"

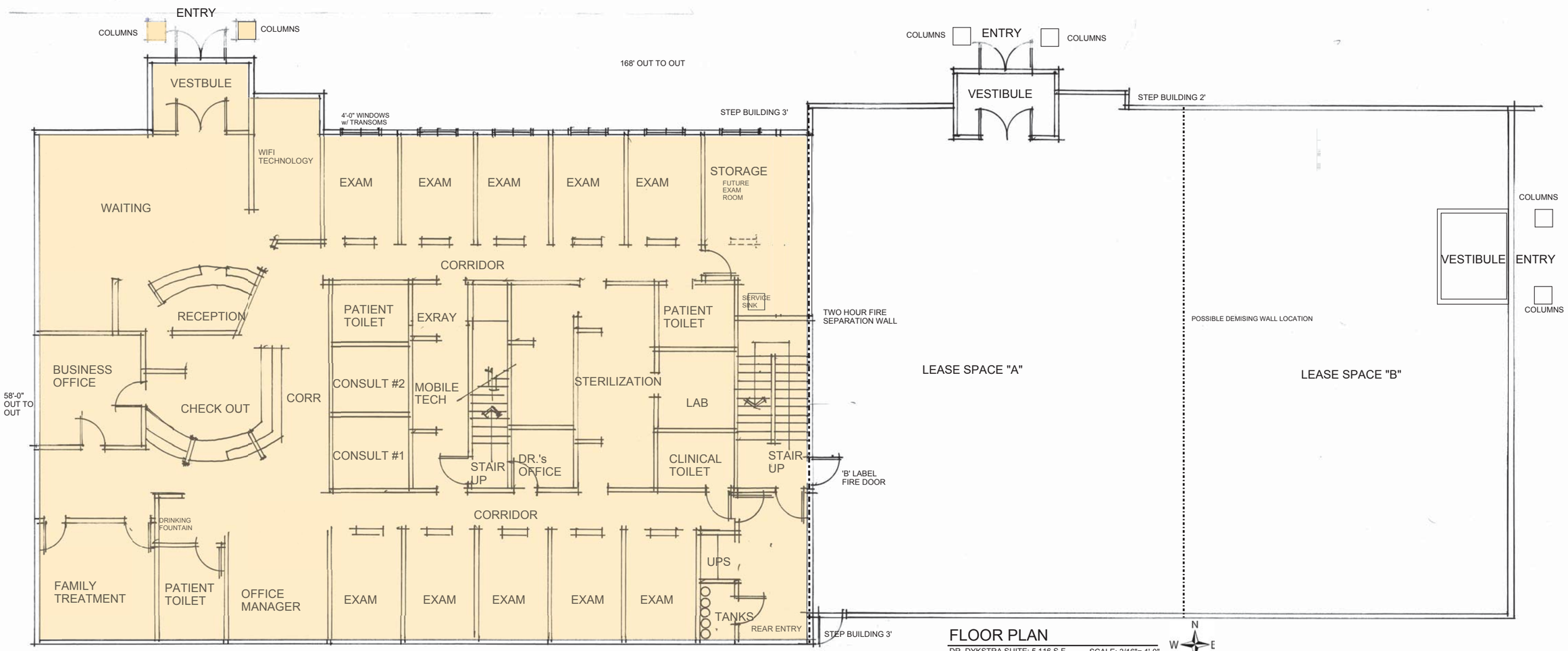

FLOOR PLAN

DR. DYKSTRA SUITE: 5,116 S.F.
LEASE SPACES: 4,546 S.F.

SCALE: 3/16"= 1'-0"

HUDSONVILLE DENTAL

16018 170ND AVENUE
PART OF THE NORTHEAST 1/4 OF SECTION 33, T8N, R16W,
GRAND HAVEN TOWNSHIP, OTTAWA COUNTY, MICHIGAN

ARCHITECTURE
Timothy J Allspach
4040 Tallman Creek Dr. NW
Grand Rapids, Mich. 49534
Phone/Fax: (616) 453-0050
email: tjaarch@sbcglobal.net

MAIN LEVEL FLOOR PLAN,
NORTH EXTERIOR ELEVATION

ISSUED FOR	
6.27.18	REVIEW
7.31.18	REVISED

The drawings and specifications are an instrument of service by architect/engineer for this specific project. Documents shall not be duplicated or reused without written consent of TJA Architecture Inc.

SHEET NO.
A-101

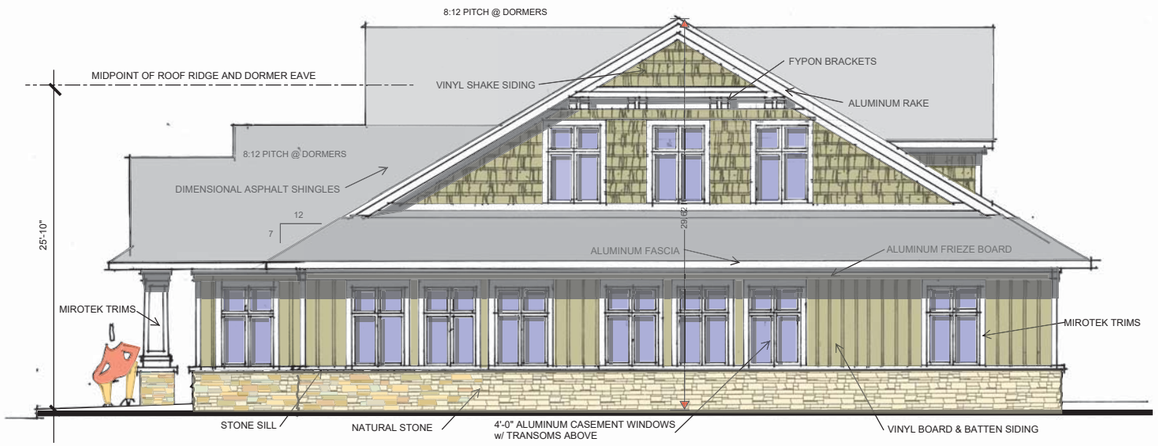

WEST ELEVATION

EAST ELEVATION SIMILAR INCLUDING COVERED PORCH ENTRY TO MATCH NORTH ELEVATION'S ENTRY

SCALE: 3/16"= 1'-0"

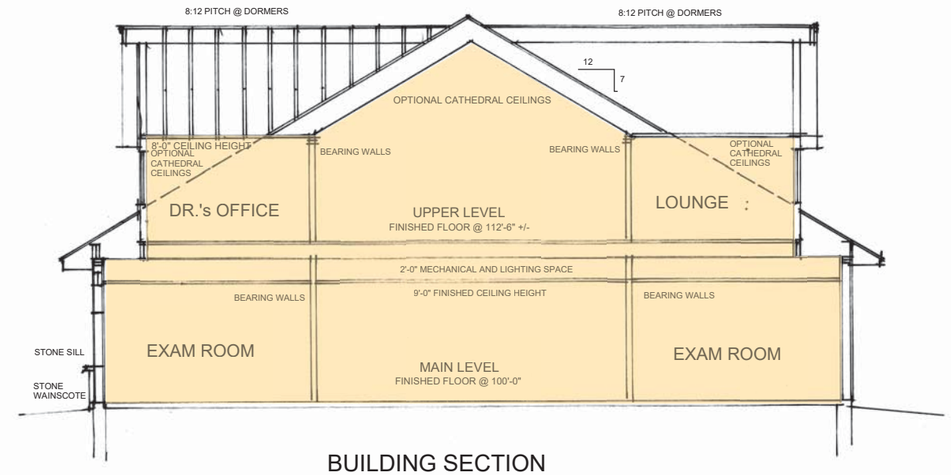

BUILDING SECTION

SCALE: 3/16"= 1'-0"

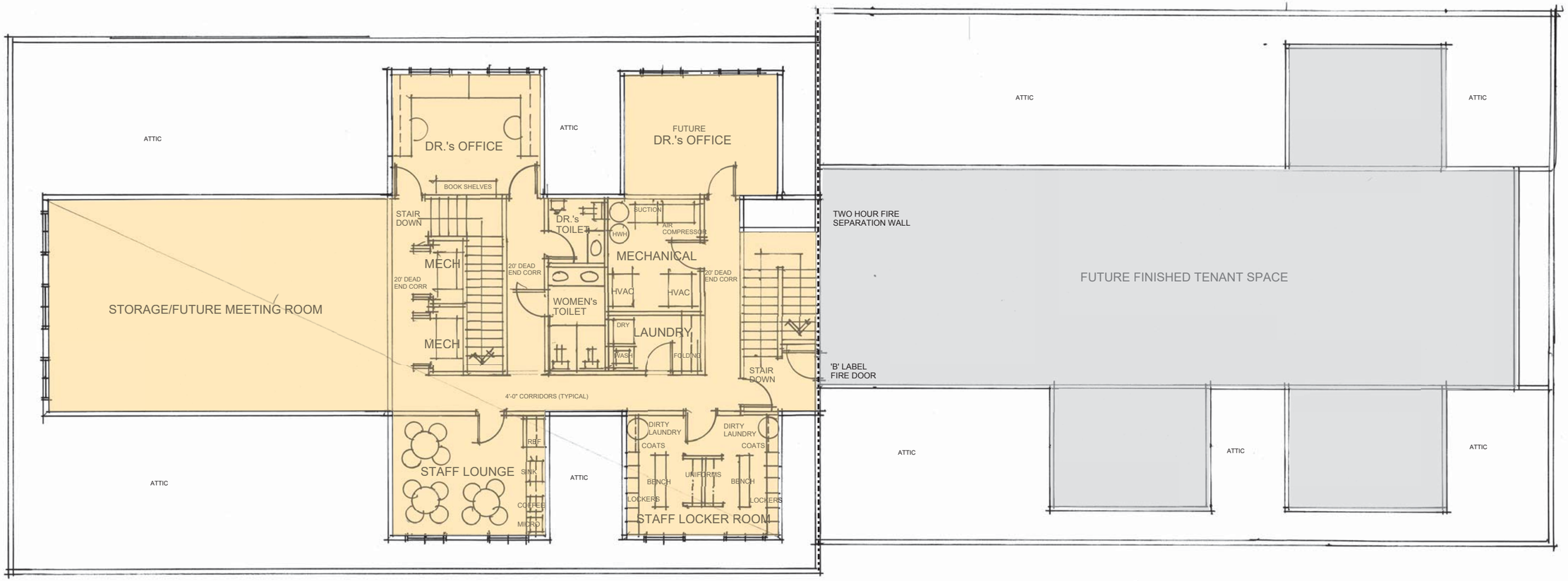

UPPER LEVEL FLOOR PLAN

DR. DYKSTRA SUITE: 2,822 S.F.
LEASE SPACE: 2,423 S.F.

SCALE: 3/16"= 1'-0"

HUDSONVILLE DENTAL

15018 172ND AVENUE
PART OF THE NORTHEAST 1/4 OF SECTION 33, T8N, R16W,
GRAND HAVEN TOWNSHIP, OTTAWA COUNTY, MICHIGAN

ARCHITECTURE
Timothy J Allspach
4040 Tallman Creek Dr. NW
Grand Rapids, Mich. 49534
Phone/Fax: (616) 453-6050
email: tjarch@sbcglobal.net

UPPER LEVEL FLOOR PLAN,
EAST EXTERIOR ELEVATION,
BUILDING SECTION

ISSUED FOR	
6.27.18	REVIEW
7.31.18	REVISED

The drawings and specifications are an instrument of service by architect/engineer for this specific project. Documents shall not be duplicated or reused without written consent of T.J.A Architecture Inc.

SHEET NO.
A-102

PSG POSTEMA signs & graphics

7475 South Division Avenue, Grand Rapids, MI 49548 Phone (616) 455-0260 Fax (616) 455-0272 www.postemasign.com

STRUCTURE
- Double sided sign
- SignComp widebody aluminum extrusion
- 2 1/4" aluminum retainers - hingeable for service
- Stone Base
- Steel poles - direct buried in concrete
- Paint to be Matthews Acrylic Polyurethane

ELECTRICAL
- White LED lighting
- 12 volt LED power supplies
- Integrated disconnect
- Photocell to be included
- UL listed and labeled

ELECTRONIC LED DISPLAY
- Watchfire Full Color display
- 54 x 90 Matrix 3' x 5' Viewable
- 16mm pixel pitch
- 5 year warranty

FACES
- White polycarbonate second surface second surface painted and opaque background Translucent vinyl lettering applied to the face
- Lower faces will be poly metal panels

watchfire Time-O-Matic AUTHORIZED DEALER

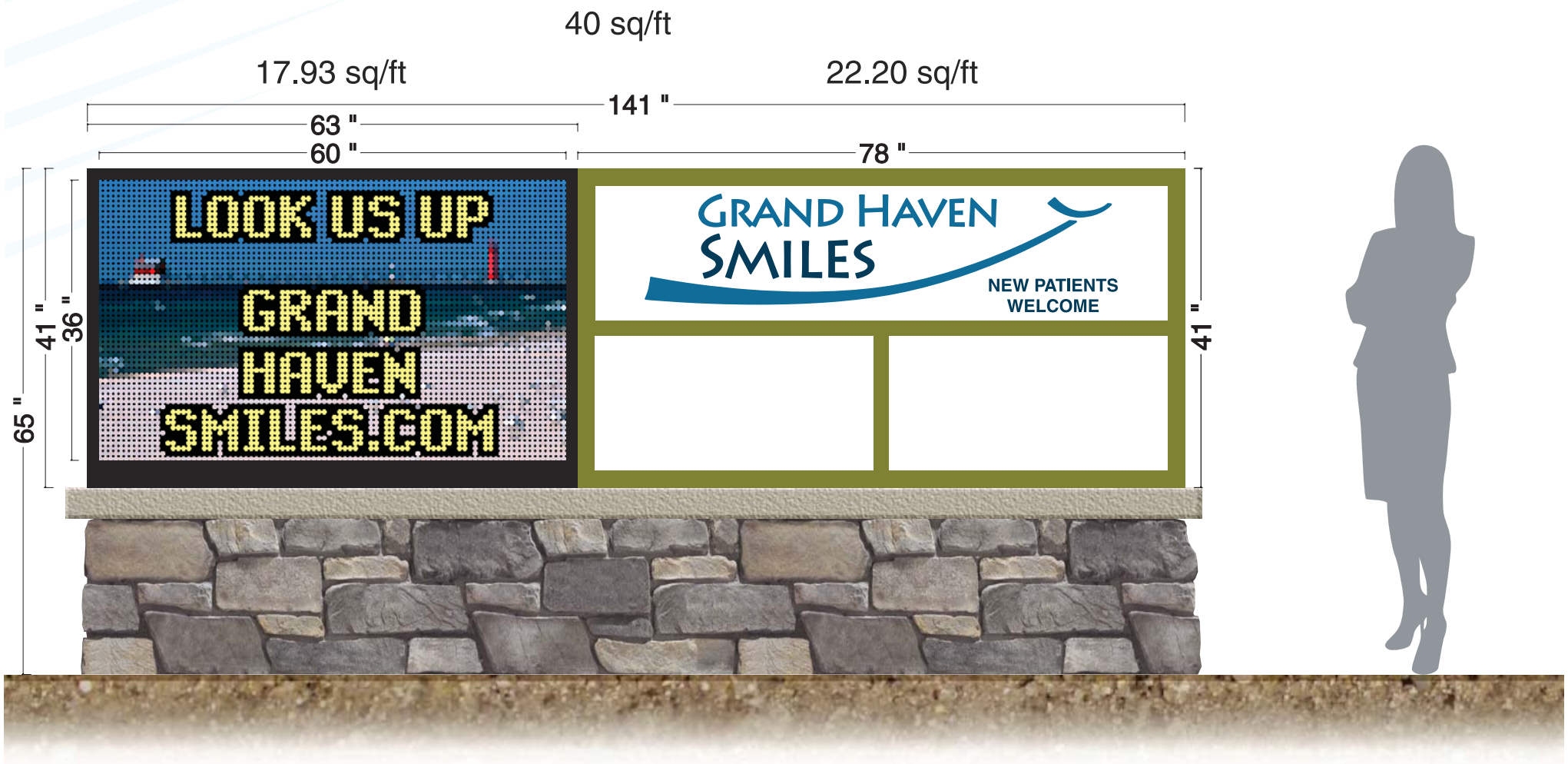

Sales Consultant: Dan Postmus email: dan@postemasign.com

All designs and specifications are sole property of Postema Signs and Graphics. Any unauthorized use or distribution is prohibited.

PSG POSTEMA signs & graphics

7475 South Division Avenue, Grand Rapids, MI 49548 Phone (616) 455-0260 Fax (616) 455-0272 www.postemasign.com

STRUCTURE
- Single sided sign
- SignComp single face body aluminum extrusion
- Paint to be Matthews Acrylic Polyurethane

ELECTRICAL
- white LED modules
- 12 volt energy saving system
- Integrated disconnect
- Photocell to be included
- UL listed and labeled

FACES
- White polycarbonate second surface second surface painted and opaque background Translucent vinyl lettering applied to the face

watchfire Time-O-Matic AUTHORIZED DEALER

WEST ELEVATION

EAST SIMILAR SCALE: 3/16"= 1'-0"

30 sq/ft

All designs and specifications are sole property of Postema Signs and Graphics. Any unauthorized use or distribution is prohibited.

Statistics						
Description	Symbol	Avg	Max	Min	Max/Min	Avg/Min
Future Parking	+	0.3 fc	0.9 fc	0.0 fc	N/A	N/A
Light Trepass Zone	+	0.0 fc	0.1 fc	0.0 fc	N/A	N/A
Parking	+	0.3 fc	0.9 fc	0.0 fc	N/A	N/A
Sidewalk	+	0.3 fc	2.8 fc	0.0 fc	N/A	N/A

LUMINAIRE SCHEDULE

TYPE	DESCRIPTION	FINISH	MANUFACTURER & CATALOG NUMBER	DRIVER	COLOR	CRI	LUMENS	LIFE	VOLTS	VA	NOTES
P4 *	LED AREA FIXTURE w/ SHIELD 20' SQUARE POLE	TBD	LITHONIA # KAD-LED-20C-530-30K-R4-MVOLT-SPUMBAK12-PIRHHS-tdb TBD	SELF DIMMING DRIVER	3000	70	4128	100k hrs	120-277	35	1,2,3
WP	MANDOOR WALLPACK	TBD	HUBBELL # QSP1-12L-15-3K7-4-U-tdb-PCU	NON-DIMMING	3000	70	1471	100k hrs	120-277	14	1,4

LUMINARE SCHEDULE NOTES :

1 OR APPROVED EQUAL BY SPECIFYING ENGINEER (BASIS OF DESIGN)
2 SEE SITE LIGHTING POLE BASE DETAIL X, SHEET EX.X
3 PROVIDE AT LEAST (1) REMOTE FOR PROGRAMMING
4 WALL MOUNT AT 8'-0" AFF (AT ABOVE DOOR HEIGHT)

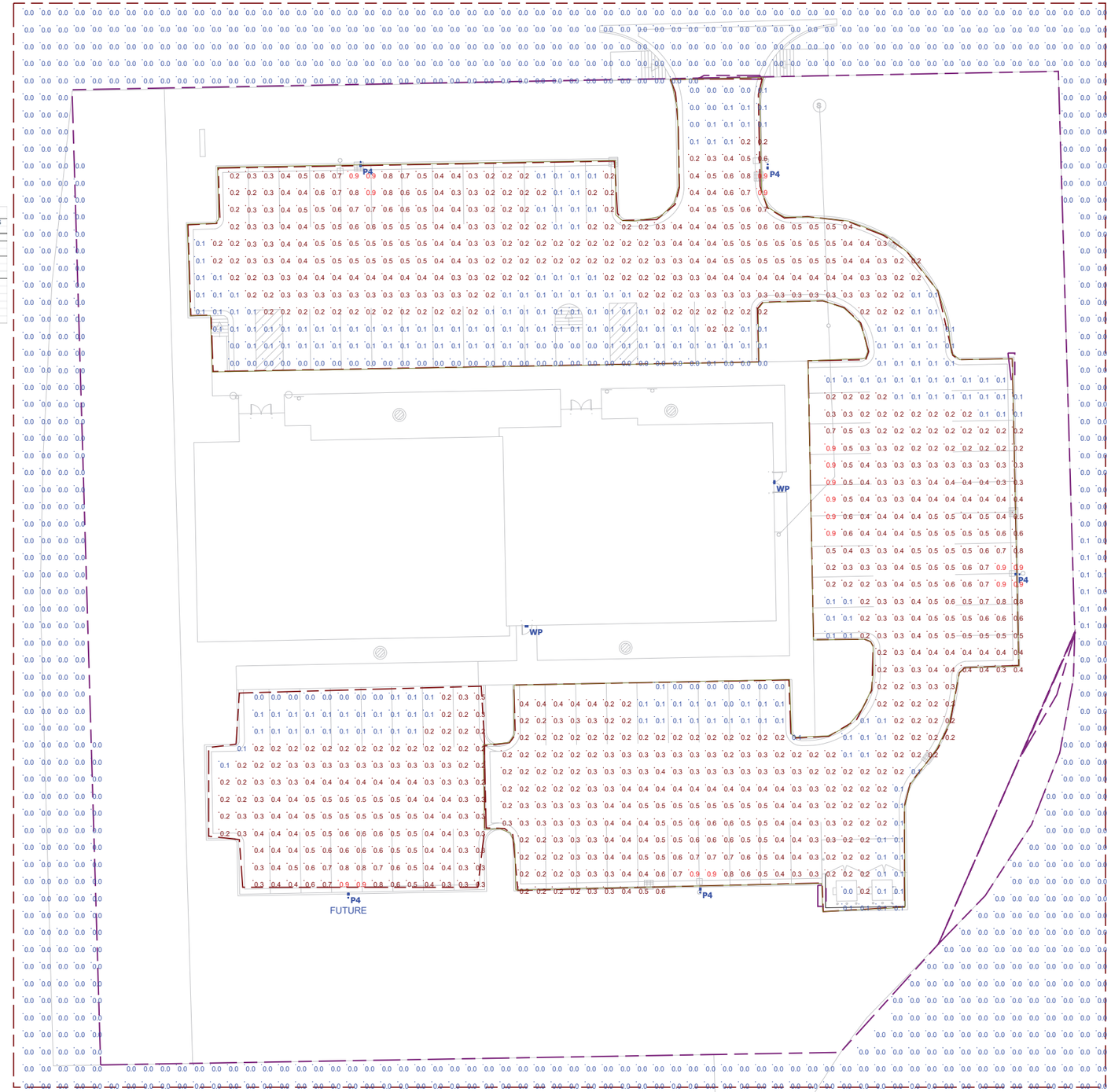

ALLIED ELECTRIC

Dykstra Dental

Designer
JP
Date
5/25/2018

KAD LED
LED Area Luminaire

Catalog Number

Notes

Type

Hit the Tab key or mouse over the page to see all interactive elements.

Specifications

EPA:	1.2 ft² (0.11 m²)
Length:	17-1/2" (44.5 cm)
Width:	17-1/2" (44.5 cm)
Height:	7-1/8" (18.1 cm)
Weight (max):	36 lbs. (16.4 kg)

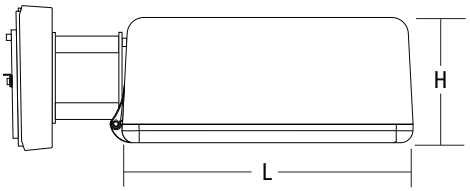

A+ Capable Luminaire

This item is an A+ capable luminaire, which has been designed and tested to provide consistent color appearance and system-level interoperability.

- All configurations of this luminaire meet the Acuity Brands' specification for chromatic consistency
- This luminaire is A+ Certified when ordered with DTL® controls marked by a shaded background. DTL DLL equipped luminaires meet the A+ specification for luminaire to photocontrol interoperability1
- This luminaire is part of an A+ Certified solution for ROAM®2 or XPoint™ Wireless control networks, providing out-of-the-box control compatibility with simple commissioning, when ordered with drivers and control options marked by a shaded background[1]

To learn more about A+, visit www.acuitybrands.com/aplus.

1. See ordering tree for details.
2. A+ Certified Solutions for ROAM require the order of one ROAM node per luminaire. Sold Separately: Link to Roam; Link to DTL DLL

A+ Capable options indicated by this color background.

Ordering Information

EXAMPLE: KAD LED 40C 1000 40K R5 MVOLT SPD04 DDBXD

KAD LED

Series	LEDs	Drive current	CCT	Distribution	Voltage	Mounting[3]
KAD LED	20C[1] 20 LEDs 30C[1] 30 LEDs 40C 40 LEDs 60C 60 LEDs	530 530 mA[1] 700 700 mA 1000 1000 mA	30K 3000 K 40K 4000 K 50K 5000 K	R2 Type II R3 Type III R4 Type IV R5 Type V	MVOLT[2] 277[3] 120[3] 347[1,2] 208[2,3] 480[1,2] 240[2,3]	

Mounting[3]

Shipped included

SPUMBAK__	Square pole universal mounting adaptor[5]
RPUMBAK__	Round pole universal mounting adaptor[5]
SPD__	Square pole
RPD__	Round pole
WBD__	Wall bracket
WWD__	Wood pole or wall

04	4" arm
06	6" arm
09	9" arm[4]
12	12" arm[5]

Shipped separately

DAD12P	Degree arm (pole)
DAD12WB	Degree arm (wall)
KMA	Mast arm external fitter

Options

Shipped installed

PER5	NEMA twist-lock five-wire receptacle only (no controls)[6,7,8]
PER7	Seven-wire receptacle only (no controls)[6,7,8]
SF	Single fuse (120, 277, 347V)[3]
DF	Double fuse (208, 240, 480V)[3]
PIR	Bi-level, motion/ambient sensor, 8–15' mounting height, ambient sensor enabled at 5fc[2,9,10,11,12]
PIRH	Bi-level, motion/ambient sensor, 15-30' mounting height, ambient sensor enabled at 5fc[2,9,10,11,12]
PIR1FC3V	Bi-level, motion/ambient sensor, 8-15' mounting height, ambient sensor enabled at 1fc[2,9,10,11,12]
PIRH1FC3V	Bi-level, motion/ambient sensor, 15-30' mounting height, ambient sensor enabled at 1fc[2,9,10,11,12]
BL30	Bi-level switched dimming, 30%[2,8,9,10]
BL50	Bi-level switched dimming, 50%[2,8,9,10]
PNMTDD3	Part night, dim till dawn[2,10,15]
PNMT5D3	Part night, dim 5 hrs[2,10,15]
PNMT6D3	Part night, dim 6 hrs[2,10,15]
PNMT7D3	Part night, dim 7 hrs[2,10,15]
HS	Houseside shield[16]

Shipped separately[16]

WG	Wire guard

Finish *(required)*

DDBXD	Dark bronze
DBLXD	Black
DNAXD	Natural aluminum
DWHXD	White
DDBTXD	Textured dark bronze
DBLBXD	Textured black
DNATXD	Textured natural aluminum
DWHGXD	Textured white

© 2012-2018 Acuity Brands Lighting, Inc. All rights reserved.

Ordering Information

Stock configurations are offered for shorter lead times:

Standard Part Number	Stock Part Number
KAD LED 30C 1000 40K R3 MVOLT PUMBAK09 DDBXD*	**KADL 30C 40K R3**
KAD LED 30C 1000 40K R5 MVOLT PUMBAK09 DDBXD*	**KADL 30C 40K R5**
KAD LED 40C 1000 40K R3 MVOLT PUMBAK09 DDBXD*	**KADL 40C 40K R3**
KAD LED 40C 1000 40K R5 MVOLT PUMBAK09 DDBXD*	**KADL 40C 40K R5**
KAD LED 30C 1000 40K R3 MVOLT PUMBAK09 PIRH DDBXD*	**KADL 30C 40K R3 PIRH**
KAD LED 30C 1000 40K R5 MVOLT PUMBAK09 PIRH DDBXD *	**KADL 30C 40K R5 PIRH**
KAD LED 40C 1000 40K R3 MVOLT PUMBAK09 PIRH DDBXD*	**KADL 40C 40K R3 PIRH**
KAD LED 40C 1000 40K R5 MVOLT PUMBAK09 PIRH DDBXD*	**KADL 40C 40K R5 PIRH**

*PUMBAK is not standard nomenclature.

Accessories

Ordered and shipped separately.

DLL127F 1.5 JU	Photocell - SSL twist-lock (120-277V) [17]
DLL347F 1.5 CUL JU	Photocell - SSL twist-lock (347V) [17]
DLL480F 1.5 CUL JU	Photocell - SSL twist-lock (480V) [17]
DSHORT SBK U	Shorting cap [17]
KADLEDHS 20C U	Houseside shield for 20 LED unit
KADLEDHS 30C U	Houseside shield for 30 LED unit
KADLEDHS 40C U	Houseside shield for 40 LED unit
KADLEDHS 60C U	Houseside shield for 60 LED unit
KMA DDBXD U	Mast arm adapter (specify finish)
KADWG U	Wire guard accessory
PUMBAK DDBXD U*	Square and round pole universal mounting bracket adaptor (specify finish)

For more control options, visit DTL and ROAM online.

**Round pole top must be 3.25" O.D. minimum.*

NOTES

1 20C or 30C LED are not available with 530 Drive Current and 347V or 480V
2 Any PIRx with BL30, BL50 or PNMT, is not available with 208V,240V, 347V, 480V or MVOLT. It is only available in 120V or 277V specified
3 MVOLT driver operates on any line voltage from 120-277V (50/60 Hz). Single fuse (SF) requires 120, 277 or 347 voltage option. Double fuse (DF) requires 208, 240 or 480 voltage option.
4 9" or 12" arm is required when two or more luminaires are oriented on a 90° drilling pattern.
5 Available as a separate combination accessory: PUMBAK (finish) U.
6 Mounting must be restricted to ±45° from horizontal aim per ANSI C136.10-2010. Not available with motion sensor.
7 Photocell ordered and shipped as a separate line item from Acuity Brands Controls. See accessories. Not available with DS option. Shorting cap included.
8 If ROAM® node required, it must be ordered and shipped as a separate line item from Acuity Brands Controls. Not available with DCR. Node with integral dimming. Shorting cap included.
9 PIR and PIR1FC3V specify the SensorSwitch SBGR-10-ODP control; PIRH and PIRH1FC3V specify the SensorSwitch SBGR-6-ODP control; see Outdoor Control Technical Guide for details. Dimming driver standard. Not available with PER5 or PER7.
10 Maximum ambient temperature with 347V or 480V is 30°C.
11 Reference Motion Sensor table.
12 Reference PER table on page 3 to see functionality.
13 Requires an additional switched circuit with same phase as main luminaire power. Supply circuit and control circuit are required to be in the same phase.
14 Dimming driver standard. MVOLT only. Not available with 347V, 480V, PER5, PER7 or PNMT options.
15 Dimming driver standard. MVOLT only. Not available with 347V, 480V, PER5, PER7, BL30 or BL50.
16 Also available as a separate accessory; see Accessories information.
17 Requires luminaire to be specified with PER option. Ordered and shipped as a separate line item from Acuity Brands Controls.

Drilling

Template #5

HANDHOLE ORIENTATION

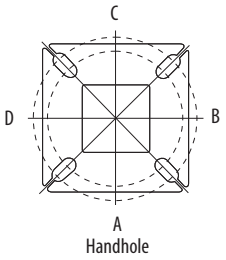

Top of Pole

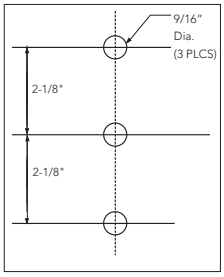

Tenon Mounting Slipfitter **

Tenon O.D.	Single Unit	2 at 180°	2 at 90° †	3 at 120°	3 at 90° †	4 at 90° †
2-3/8"	T20-190	T20-280	T20-290	T20-320 †	T20-390	T20-490
2-7/8"	T25-190	T25-280	T25-290	T25-320	T25-390	T25-490
4"	T35-190	T35-280	T35-290	T35-320	T35-390	T35-490

*** For round pole mounting (RPDXX) only.* *† Requires 9" or 12" arm.*

Pole drilling nomenclature: # of heads at degree from handhole (default side A)				
DM19	DM28	DM29	DM39	DM49
1 @ 90°	2 @ 280°	2 @ 90°	3 @ 90°	4 @ 90°
Side B	Side B & D	Side B & C	Side B, C, & D	Sides A, B, C, D
Note: Review luminaire spec sheet for specific nomenclature				

© 2012-2018 Acuity Brands Lighting, Inc. All rights reserved.

Performance Data

Lumen Output

Lumen values are from photometric tests performed in accordance with IESNA LM-79-08. Data is considered to be representative of the configurations shown, within the tolerances allowed by Lighting Facts. Contact factory for performance data on any configurations not shown here.

LEDs	Drive Current (mA)	System Watts	Dist. Type	30K (3000 K, 70 CRI)					40K (4000 K, 70 CRI)					50K (5000 K, 70 CRI)				
				Lumens	B	U	G	LPW	Lumens	B	U	G	LPW	Lumens	B	U	G	LPW
20C	530 mA	35W	R2	4,140	1	0	1	118	4,446	1	0	1	127	4,473	1	0	1	128
			R3	4,123	1	0	1	118	4,427	1	0	1	126	4,455	1	0	1	127
			R4	4,128	1	0	1	118	4,433	1	0	1	127	4,460	1	0	1	127
			R5	4,381	2	0	1	125	4,704	3	0	1	134	4,734	3	0	1	135
	700 mA	45W	R2	5,271	1	0	1	117	5,660	1	0	1	126	5,696	1	0	2	127
			R3	5,250	1	0	2	117	5,637	1	0	2	125	5,672	1	0	2	126
			R4	5,256	1	0	2	117	5,644	1	0	2	125	5,679	1	0	2	126
			R5	5,578	3	0	1	124	5,990	3	0	1	133	6,027	3	0	1	134
	1000 mA	73W	R2	7,344	1	0	2	101	7,886	2	0	2	108	7,935	2	0	2	109
			R3	7,314	1	0	2	100	7,854	1	0	2	108	7,903	1	0	2	108
			R4	7,322	1	0	2	100	7,863	1	0	2	108	7,912	1	0	2	108
			R5	7,771	3	0	1	106	8,345	3	0	1	114	8,397	3	0	1	115
30C	530 mA	53W	R2	6,166	1	0	2	116	6,621	1	0	2	125	6,663	1	0	2	126
			R3	6,141	1	0	2	116	6,594	1	0	2	124	6,635	1	0	2	125
			R4	6,148	1	0	2	116	6,602	1	0	2	125	6,643	1	0	2	125
			R5	6,525	3	0	1	123	7,006	3	0	1	132	7,050	3	0	1	133
	700 mA	69W	R2	7,817	2	0	2	113	8,395	2	0	2	122	8,447	2	0	2	122
			R3	7,785	1	0	2	113	8,360	2	0	2	121	8,412	2	0	2	122
			R4	7,794	1	0	2	113	8,370	1	0	2	121	8,422	1	0	2	122
			R5	8,272	3	0	2	120	8,883	3	0	2	129	8,938	3	0	2	130
	1000 mA	108W	R2	10,755	2	0	2	100	11,549	2	0	2	107	11,621	2	0	2	108
			R3	10,711	2	0	2	99	11,502	2	0	2	106	11,574	2	0	2	107
			R4	10,724	2	0	2	99	11,515	2	0	2	107	11,587	2	0	2	107
			R5	11,381	3	0	2	105	12,221	4	0	2	113	12,297	4	0	2	114
40C	530 mA	71W	R2	8,156	2	0	2	115	8,758	2	0	2	123	8,812	2	0	2	124
			R3	8,122	2	0	2	114	8,722	2	0	2	123	8,776	2	0	2	124
			R4	8,132	1	0	2	115	8,732	1	0	2	123	8,786	1	0	2	124
			R5	8,630	3	0	2	122	9,267	3	0	2	131	9,325	3	0	2	131
	700 mA	94W	R2	10,286	2	0	2	109	11,045	2	0	2	118	11,114	2	0	2	118
			R3	10,244	2	0	2	109	11,000	2	0	2	117	11,069	2	0	2	118
			R4	10,256	2	0	2	109	11,013	2	0	2	117	11,081	2	0	2	118
			R5	10,884	3	0	2	116	11,688	4	0	2	124	11,761	4	0	2	125
	1000 mA	141W	R2	13,923	2	0	2	99	14,951	2	0	2	106	15,045	2	0	2	107
			R3	13,866	2	0	3	98	14,890	2	0	3	106	14,983	2	0	3	106
			R4	13,882	2	0	3	98	14,907	2	0	3	106	15,000	2	0	3	106
			R5	14,733	4	0	2	104	15,821	4	0	2	112	15,920	4	0	2	113
60C	530 mA	103W	R2	11,996	2	0	2	116	12,882	2	0	2	125	12,963	2	0	2	126
			R3	11,947	2	0	2	116	12,829	2	0	2	125	12,909	2	0	2	125
			R4	11,961	2	0	2	116	12,844	2	0	2	125	12,925	2	0	2	125
			R5	12,694	4	0	2	123	13,632	4	0	2	132	13,717	4	0	2	133
	700 mA	137W	R2	14,927	2	0	2	109	16,029	3	0	3	117	16,130	3	0	3	118
			R3	14,866	2	0	3	109	15,964	2	0	3	117	16,063	2	0	3	117
			R4	14,884	2	0	2	109	15,982	2	0	3	117	16,082	2	0	3	117
			R5	15,796	4	0	2	115	16,962	4	0	2	124	17,068	4	0	2	125
	1000 mA	216W	R2	19,328	3	0	3	89	20,754	3	0	3	96	20,884	3	0	3	97
			R3	19,248	3	0	3	89	20,669	3	0	4	96	20,799	3	0	4	96
			R4	19,271	3	0	3	89	20,693	3	0	4	96	20,823	3	0	4	96
			R5	20,452	4	0	2	95	21,962	4	0	2	102	22,099	4	0	2	102

© 2012-2018 Acuity Brands Lighting, Inc. All rights reserved.

Performance Data

Lumen Ambient Temperature (LAT) Multipliers

Use these factors to determine relative lumen output for average ambient temperatures from 0-40°C (32-104°F).

Ambient		Lumen Multiplier
0°C	32°F	1.02
10°C	50°F	1.01
20°C	68°F	1.00
25°C	**77°F**	**1.00**
30°C	86°F	1.00
40°C	104°F	0.99

Projected LED Lumen Maintenance

Data references the extrapolated performance projections for the **KAD LED** platform in a **25°C ambient**, based on 10,000 hours of LED testing (tested per IESNA LM-80-08 and projected per IESNA TM-21-11).

To calculate LLF, use the lumen maintenance factor that corresponds to the desired number of operating hours below. For other lumen maintenance values, contact factory.

Operating Hours	0	25,000	50,000	100,000
Lumen Maintenance Factor	KAD LED 60C 1000			
	1.0	0.91	0.86	0.76
	KAD LED 40C 1000			
	1.0	0.93	0.88	0.79
	KAD LED 60C 700			
	1.0	0.98	0.97	0.94

Electrical Load

Number of LEDs	Drive Current (mA)	System Watts	Current (A) 120	208	240	277	347	480
20	530	35	0.30	0.18	0.16	0.15	-	-
	700	45	0.39	0.23	0.20	0.18	0.15	0.12
	1000	73	0.61	0.35	0.31	0.27	0.22	0.17
30	530	53	0.44	0.26	0.23	0.20	-	-
	700	69	0.58	0.34	0.29	0.26	0.21	0.16
	1000	108	0.90	0.52	0.46	0.40	0.32	0.24
40	530	71	0.60	0.35	0.32	0.29	0.21	0.16
	700	94	0.79	0.46	0.41	0.36	0.27	0.20
	1000	141	1.18	0.68	0.59	0.52	0.42	0.30
60	530	103	0.87	0.50	0.44	0.39	0.29	0.22
	700	137	1.15	0.66	0.58	0.51	0.40	0.29
	1000	216	1.81	1.04	0.92	0.81	0.63	0.47

NOTE: All ratings in this table are for a nominal system operated at 25°C ambient temperature. Current and power specifications in this table do not include branch circuit derating specified in the National Electrical Code. Please observe all applicable electrical codes and ratings.

Motion Sensor Default Settings						
Option	Dimmed State	High Level (when triggered)	Phototcell Operation	Dwell Time	Ramp-up Time	Ramp-down Time
PIR or PIRH	3V (37%) Output	10V (100%) Output	Enabled @ 5FC	5 min	3 sec	5 min
*PIR1FC3V or PIRH1FC3V	3V (37%) Output	10V (100%) Output	Enabled @ 1FC	5 min	3 sec	5 min
*for use with Inline Dusk to Dawn or timer.						

PER Table						
Control	PER (3 wire)	PER5 (5 wire)		PER7 (7 wire)		
			Wire 4/Wire5		Wire 4/Wire5	Wire 6/Wire7
Photocontrol Only (On/Off)	✔	⚠	Wired to dimming leads on driver	⚠	Wired to dimming leads on driver	Wires Capped inside fixture
ROAM	⊘	✔	Wired to dimming leads on driver	⚠	Wired to dimming leads on driver	Wires Capped inside fixture
ROAM with Motion (ROAM on/off only)	⊘	⚠	Wires Capped inside fixture	⚠	Wires Capped inside fixture	Wires Capped inside fixture
Future-proof*	⊘	⚠	Wired to dimming leads on driver	✔	Wired to dimming leads on driver	Wires Capped inside fixture
Future-proof* with Motion	⊘	⚠	Wires Capped inside fixture	✔	Wires Capped inside fixture	Wires Capped inside fixture

✔ Recommended
⊘ Will not work
⚠ Alternate

*Future-proof means: Ability to change controls in the future.

Photometric Diagrams

To see complete photometric reports or download .ies files for this product, visit Lithonia Lighting's KAD LED homepage.

Isofootcandle plots for the KAD LED 60C 1000 40K. Distances are in units of mounting height (20').

LEGEND
- 0.1 fc
- 0.5 fc
- 1.0 fc

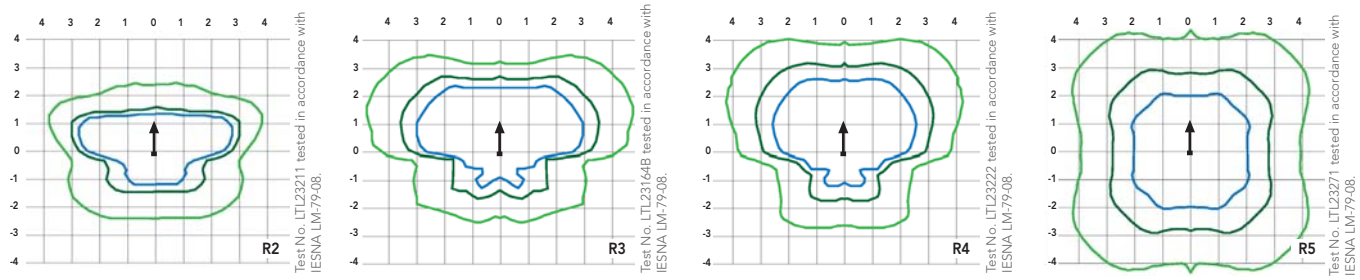

© 2012-2018 Acuity Brands Lighting, Inc. All rights reserved.

FEATURES & SPECIFICATIONS

INTENDED USE
The energy savings and long life of the KAD LED area luminaire make it a reliable choice for illuminating streets, walkways, parking lots, and surrounding areas.

CONSTRUCTION
Single-piece die-cast, aluminum housing with contoured edges has a 0.12" nominal wall thickness. Die-cast door frame has an impact-resistant, tempered glass lens that is fully gasketed with one piece tubular silicone.

FINISH
Exterior parts are protected by a zinc-infused Super Durable TGIC thermoset powder coat finish that provides superior resistance to corrosion and weathering. A tightly controlled multi-stage process ensures a minimum 3 mils thickness for a finish that can withstand extreme climate changes without cracking or peeling.

OPTICS
Precision-molded refractive acrylic lenses are available in four distributions. Light engines are available in standard 4000K, 3000K or 5000K (70 CRI) configurations.

ELECTRICAL
Light engine consists of high-efficacy LEDs mounted to a metal-core circuit board and aluminum heat sink, ensuring optimal thermal management and long life. Class 1 electronic driver has a power factor >90%, THD <20%, and has an expected life of 100,000 hours with <1% failure rate. Easily-serviceable surge protection device meets a minimum Category C Low (per ANSI/IEEE C62.41.2).

INSTALLATION
Included universal mounting block and extruded aluminum arm facilitate quick and easy installation using nearly any existing drilling pattern. Stainless steel bolts fasten the luminaire to the mounting block securing it to poles or walls. The KAD LED can withstand up to a 1.5 G vibration load rating per ANSI C136.31. The KAD LED also utilizes the standard K-Series (Template #5) for pole drilling.

LISTINGS
CSA certified to U.S. and Canadian standards. Luminaire is IP65 rated. Rated for -40°C minimum ambient.
DesignLights Consortium® (DLC) qualified product. Not all versions of this product may be DLC qualified. Please check the DLC Qualified Products List at www.designlights.org/QPL to confirm which versions are qualified.

WARRANTY
5-year limited warranty. Complete warranty terms located at:
www.acuitybrands.com/CustomerResources/Terms_and_conditions.aspx.

Note: Actual performance may differ as a result of end-user environment and application. All values are design or typical values, measured under laboratory conditions at 25 °C. Specifications subject to change without notice.

© 2012-2018 Acuity Brands Lighting, Inc. All rights reserved.

LEGEND

1. Site Access Point
2. Dental Office Main Entrance
3. Tenant Main Entrance
4. Deferred Parking (16 Spaces)
5. Dumpsters with Enclosure
6. Ground Sign
7. Existing Tree Stand to Remain

NOTES

Total Acreage	= 1.69 ac
Phase 1 Parking	= 66 Spaces
Phase 2 Parking (Deferred)	= 16 Spaces
Total Parking Provided	= 82 Spaces

August 10, 2018 north 0' 10' 20' 40' scale 1" = 20'

GRAND HAVEN PROFESSIONAL CENTER

SITE PLAN RENDERING

project number: 16201809

NEDERVELD

GRAND HAVEN PROFESSIONAL CENTER

GRAND HAVEN TOWNSHIP, OTTAWA COUNTY, MICHIGAN

LOCATION MAP
NOT TO SCALE

SITE PLAN

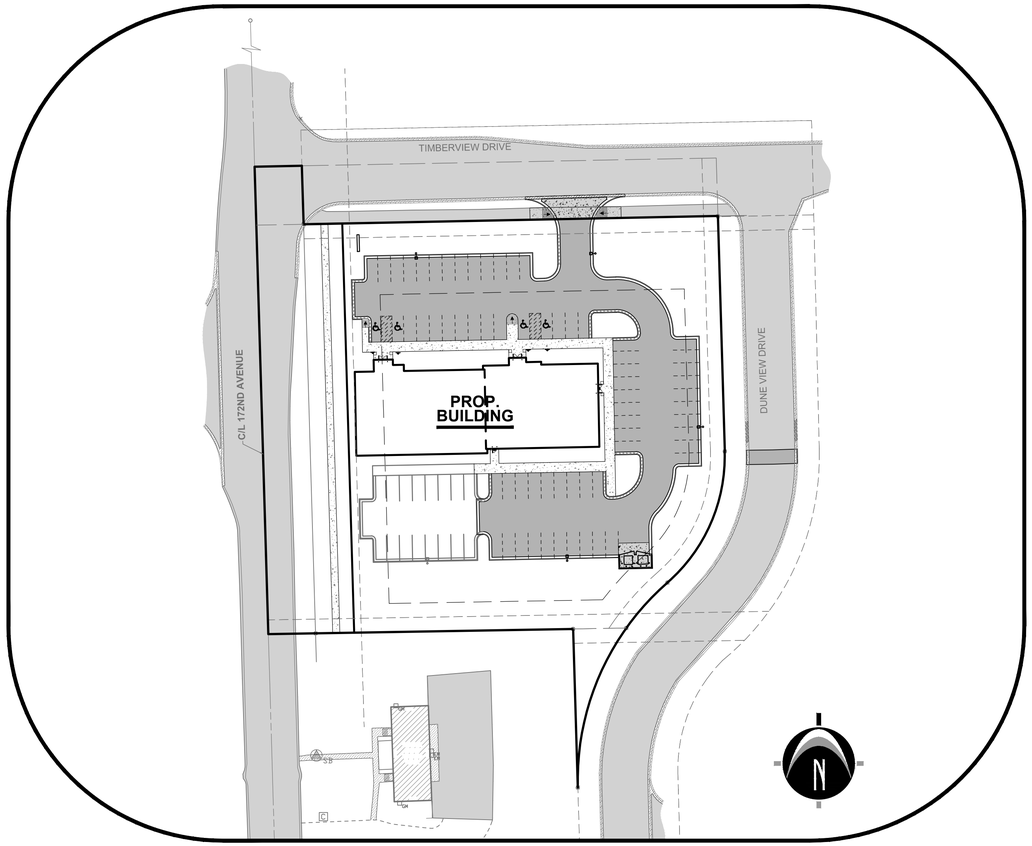

UTILITY COMPANY CONTACTS

Gas	Michigan Gas Utilities	Dave Mauer	(269) 692-3911
Electric	Grand Haven Board of Light and Power	Rob Shelleg	(616) 846-6250
Telephone	AT&T	Rick Arendsen	(616) 392-9968
Cable	Charter Communications	Rob Jaworowski	(616) 550-1863

NOTE: THIS PROJECT WILL BE CONSTRUCTED IN ACCORDANCE WITH MICHIGAN BUILDING CODE 2015 AND INTERNATIONAL FIRE CODE, 2015.

SHEET INDEX

Index / Cover Sheet	C-100	Page 1
Existing Site Conditions Plan	C-201	Page 2
Demolition Plan	C-203	Page 3
Site Layout Plan	C-205	Page 4
S.E.S.C. & Grading Plan	C-300	Page 5
Utility Plan	C-400	Page 6
Details and Specifications	C-500	Page 7
Landscape Plan	L-101	Page 8

811 Know what's **below.** **CALL** before you dig.

UTILITY LOCATIONS ARE DERIVED FROM ACTUAL MEASUREMENTS OR AVAILABLE RECORDS. THEY SHOULD NOT BE INTERPRETED TO BE EXACT LOCATIONS NOR SHOULD IT BE ASSUMED THAT THEY ARE THE ONLY UTILITIES IN THIS AREA.

NOTE:
EXISTING UTILITIES AND SERVICE LINES IDENTIFIED AS "(PLAN)" WERE OBTAINED FROM AVAILABLE AS-BUILT RECORD DRAWINGS. THE CONTRACTOR SHALL VERIFY THE LOCATION, DEPTH AND STATUS OF ALL UTILITIES AND SERVICE LINES PRIOR TO NEW CONNECTIONS.

OTHER LOGOS

NEDERVELD
www.nederveld.com
800.222.1868
GRAND RAPIDS
217 Grandville Ave., Suite 302
Grand Rapids, MI 49503
Phone: 616.575.5190
ANN ARBOR
CHICAGO
COLUMBUS
HOLLAND
INDIANAPOLIS
ST. LOUIS

PREPARED FOR:
Hudsonville Professional Center, LLC
Dr. Brad Dykstra

3250 Central Boulevard
Hudsonville, MI 49426
Phone: 616.669.6600

REVISIONS:

Title: Preliminary PUD Amendment		V. Date: 06.04.18
Drawn: Brad M.	Checked: Kyle W.	S. Date: 06.04.18
Title: Township Review Comments		V. Date: 07.19.18
Drawn: Brad M.	Checked: Kyle W.	S. Date: 07.19.18
Title: Township Review Comments		V. Date: 08.10.18
Drawn: Brad M.	Checked: Kyle W.	S. Date: 08.10.18

Grand Haven Professional Center

Cover Sheet
15018 172ND AVENUE
PART OF THE NORTHEAST 1/4 OF SECTION 33, T8N, R16W, GRAND HAVEN TOWNSHIP, OTTAWA COUNTY, MICHIGAN

STAMP:
STATE OF MICHIGAN
KYLE D. WILSON
ENGINEER
No. 37827
LICENSED PROFESSIONAL ENGINEER

PROJECT NO:
16201809

SHEET NO:
C-100

16201809-CP1.dwg BM 8/9/2018 15:25

© 2016 Nederveld, Inc.

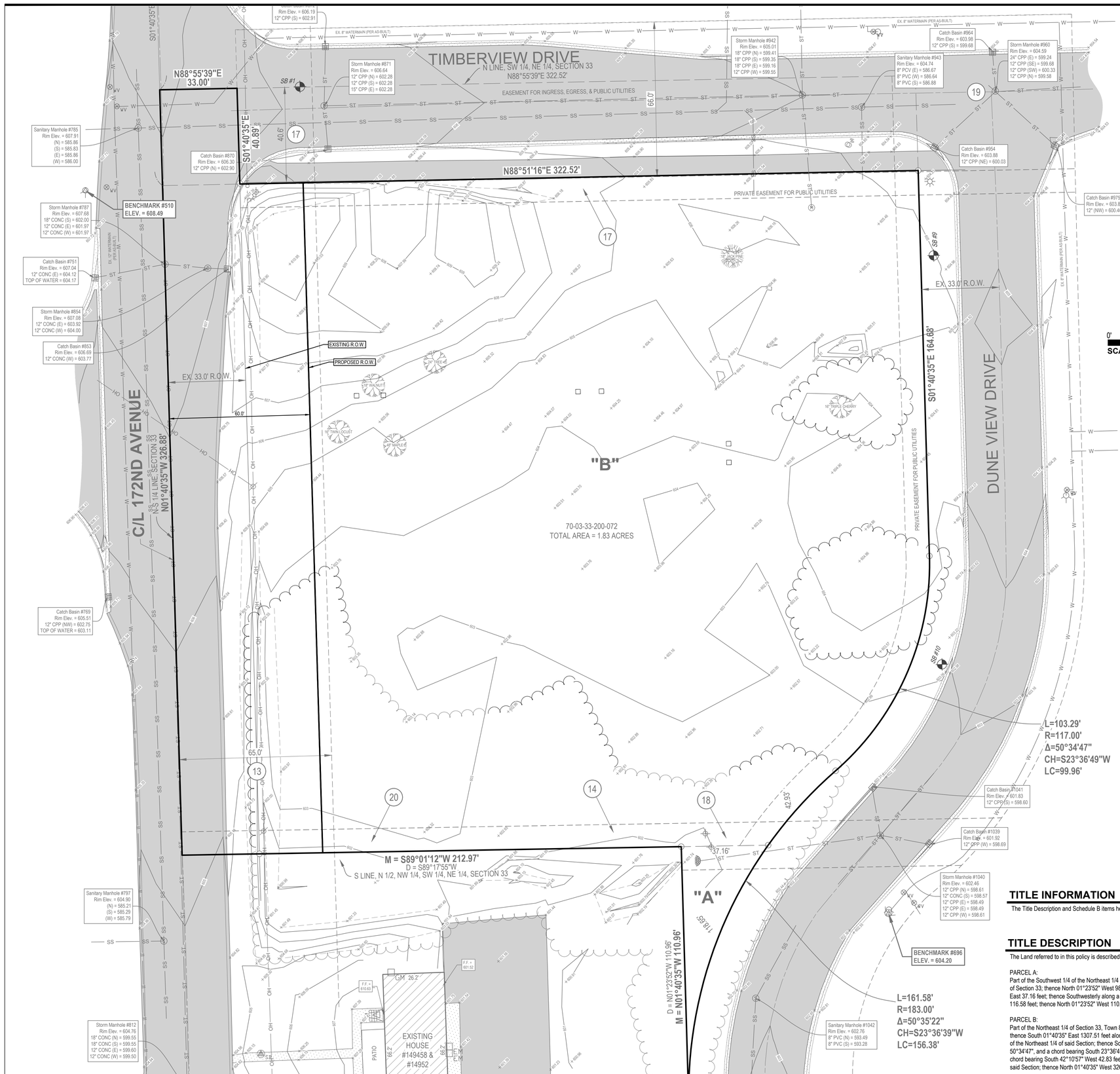

BENCHMARKS

BENCHMARK #510 ELEV. = 608.49 (NAVD88)
Southwest flange bolt under "T" in "TC/W" on hydrant. Located 33'± West of the centerline of 172nd Avenue & 32'± South of the centerline of Timberview Drive.

BENCHMARK #696 ELEV. = 604.20 (NAVD88)
Top of Southeast flange bolt under "E" in "EJIW" on hydrant, 1.1'± above grade. Located 24'± Southeasterly of the centerline of Dune View Drive & 350'± South of the centerline of Timberview Drive.

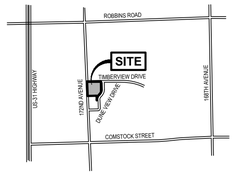

LOCATION MAP

NOT TO SCALE

LEGEND

△	Benchmark	S	Sign
	Catch Basin - Square	Ⓢ	Sanitary Sewer Manhole
C	Cable Riser	Ⓓ	Stormwater Manhole
	Culvert	TR	Transformer
	Deciduous Tree		Utility Pole
EM	Electric Meter	VM	Water Meter
	Evergreen Tree	WV	Water Valve
GM	Gas Meter	OH	Overhead Utility
	Guy Anchor	SS	Sanitary
	Hydrant	ST	Storm
	Iron - Found		Tree
	Light Pole		Asphalt
M	Manhole		Concrete
SB	Soil Boring		Building

N

0' 10' 20' 40'

SCALE: 1" = 20'

SCHEDULE B - SECTION II NOTES

(10) Easement granted to Michigan Bell Telephone Company recorded in Liber 851, Page 235.**(THE EASEMENT DESCRIBED IN THIS DOCUMENT IS NOT ON, OR DOES NOT TOUCH, THE SURVEYED PROPERTY, AND IS NOT SHOWN ON THIS SURVEY.)**

(11) Terms, conditions and provisions which are recited in Easement recorded in Liber 379, Page 322.**(DOCUMENT HAS NOT BEEN RECEIVED AND THEREFOR NOT REVIEWED.)**

(13) Terms, conditions and provisions which are recited in Transmission and Distribution Line Right of Way Easement recorded in Liber 2628, Page 59.**(THE EASEMENT DESCRIBED IN THIS DOCUMENT IS SHOWN ON THIS SURVEY.)**

(14) Terms, conditions and provisions which are recited in Release of Right of Way recorded in Liber 3944, Page 876.**(THE EASEMENT DESCRIBED IN THIS DOCUMENT IS SHOWN ON THIS SURVEY.)**

(15) Terms, conditions and provisions which are recited in Utility Easement recorded in Liber 4313, Page 481.**(THE EASEMENT DESCRIBED IN THIS DOCUMENT IS NOT ON, OR DOES NOT TOUCH, THE SURVEYED PROPERTY, AND IS NOT SHOWN ON THIS SURVEY.)**

(16) Easement granted to Consumers Energy Company recorded in Liber 4534, Page 954.**(THE LOCATION OF THE EASEMENT CANNOT BE DETERMINED FROM THE RECORD DOCUMENT, AND IS NOT SHOWN ON THIS SURVEY.)**

(17) Terms, conditions and provisions which are recited in Warranty Deed recorded in Liber 4549, Page 627.**(THE EASEMENT DESCRIBED IN THIS DOCUMENT IS SHOWN ON THIS SURVEY.)**

(18) Terms, conditions and provisions which are recited in Agreement for the Establishment of a County Drain and County Drainage District Pursuant to Section 433 and Act No. 40 of the Public Acts of 1956, as amended recorded in Liber 4686, Page 370.**(THE EASEMENT DESCRIBED IN THIS DOCUMENT IS SHOWN ON THIS SURVEY.)**

(19) Terms, conditions and provisions which are recited in Warranty Deed recorded in Liber 4775, Page 65.**(THE EASEMENT DESCRIBED IN THIS DOCUMENT IS SHOWN ON THIS SURVEY.**

(20) Terms, conditions and provisions which are recited in Affidavit of Right of Way recorded in Instrument No. 2010-0004791 and the Agreement to Vacate a Drain Easement recorded in Liber 3944, Page 881.**(THE EASEMENT DESCRIBED IN THIS DOCUMENT IS SHOWN ON THIS SURVEY.)**

SURVEYOR'S NOTES

1) Flood Zone Classification: **An examination of the National Flood Insurance Program's Flood Insurance Rate Map for Community Number 260270, Map Number 26139C0087E, with an Effective Date of December 16, 2011, shows this parcel to be located in Zone X (Areas determined to be outside of the 0.2% annual chance floodplain.). No field surveying was performed to determine this zone.**
2) Utility locations are derived from actual measurements or available records. They should not be interpreted to be exact locations nor should it be assumed that they are the only utilities in this area.
3) NOTE TO CONTRACTORS: 3 (THREE) WORKING DAYS BEFORE YOU DIG, CALL MISS DIG AT TOLL FREE 1-800-482-7171 FOR UTILITY LOCATIONS ON THE GROUND.

TITLE INFORMATION

The Title Description and Schedule B items hereon are from Transnation Title Commitment No. 183901WMS, dated July 15, 2016

TITLE DESCRIPTION

The Land referred to in this policy is described as follows:

PARCEL A:
Part of the Southwest 1/4 of the Northeast 1/4 of Section 33, Town 8 North, Range 16 West, Grand Haven Township, Ottawa County, Michigan, described as: Commencing at the central 1/4 corner of Section 33; thence North 01°23'52" West 980.67 feet along the North-South 1/4 line; thence North 89°17'55" East 213.02 feet to the point of beginning of this description; thence North 89°17'55" East 37.16 feet; thence Southwesterly along a curve to the left, having a radius of 183.00 feet, a central angle of 37°08'54", an arc length of 118.65 feet and chord bearing South 17°10'35" West 116.58 feet; thence North 01°23'52" West 110.96 feet to the point of beginning.

PARCEL B:
Part of the Northeast 1/4 of Section 33, Town 8 North, Range 16 West, Grand Haven Township, Ottawa County, Michigan, described as: Commencing at the North 1/4 corner of said Section; thence South 01°40'35" East 1307.51 feet along the North-South 1/4 line of said Section to the point of beginning; thence North 88°55'39" East 322.52 feet along the North line of the Southwest 1/4 of the Northeast 1/4 of said Section; thence South 01°40'35" East 205.24 feet; thence Southwesterly 103.29 feet along a 117.00 foot radius curve to the right, said curve having a central angle of 50°34'47", and a chord bearing South 23°36'49" West 99.96 feet; thence Southwesterly 42.93 feet along a 183.00 foot radius curve to the left, said curve having a central angle of 13°26'31", and a chord bearing South 42°10'57" West 42.83 feet; thence South 89°01'03" West 250.13 feet along the South line of the North 1/2 of the Northwest 1/4 of the Southwest 1/4 of the Northeast 1/4 of said Section; thence North 01°40'35" West 326.88 feet along said North-South 1/4 line to the point of beginning.

NEDERVELD
www.nederveld.com
800.222.1868
GRAND RAPIDS
217 Grandville Ave., Suite 302
Grand Rapids, MI 49503
Phone: 616.575.5190
ANN ARBOR
CHICAGO
COLUMBUS
HOLLAND
INDIANAPOLIS
ST. LOUIS

PREPARED FOR:
Hudsonville Professional Center, LLC
Dr. Brad Dykstra

3250 Central Boulevard
Hudsonville, MI 49426
Phone: 616.669.6600

REVISIONS:

Title: Preliminary PUD Amendment		V. Date: 06.04.18
Drawn: Brad M.	Checked: Kyle W.	S. Date: 06.04.18
Title: Township Review Comments		V. Date: 07.19.18
Drawn: Brad M.	Checked: Kyle W.	S. Date: 07.19.18
Title: Township Review Comments		V. Date: 08.10.18
Drawn: Brad M.	Checked: Kyle W.	S. Date: 08.10.18

Grand Haven Professional Center

Existing Site Conditions Plan

15018 172ND AVENUE
PART OF THE NORTHEAST 1/4 OF SECTION 33, T8N, R16W, GRAND HAVEN TOWNSHIP, OTTAWA COUNTY, MICHIGAN

STAMP:

STATE OF MICHIGAN
KYLE D. WILSON
ENGINEER
No. 37827
LICENSED PROFESSIONAL ENGINEER

PROJECT NO:
16201809

SHEET NO:
C-201

16201809-C01.dwg BM 8/30/018 10:25

© 2016 Nederveld, Inc.

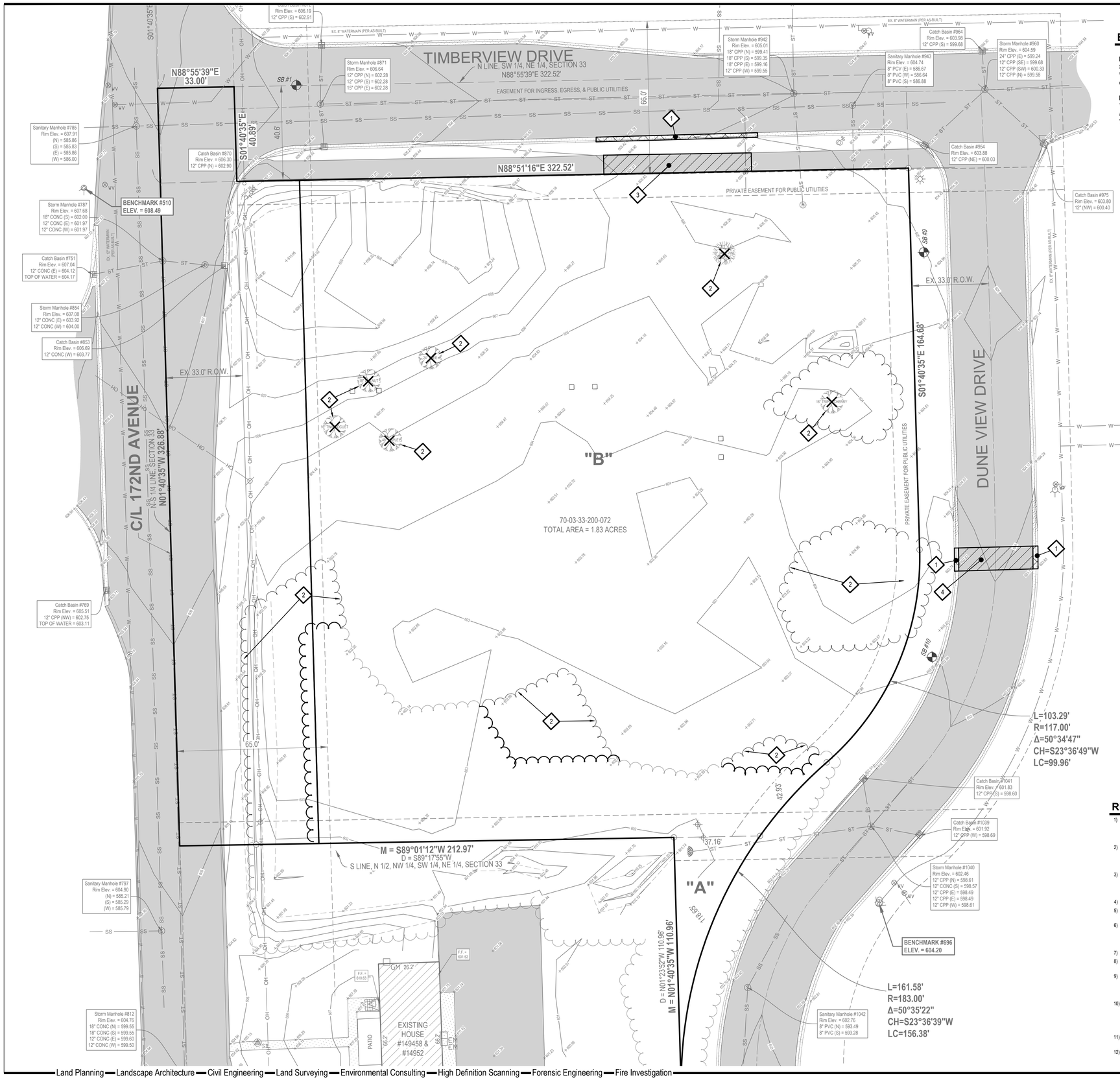

BENCHMARKS

BENCHMARK #510 ELEV. = 608.49 (NAVD88)
Southwest flange bolt under "T" in "TC/W" on hydrant. Located 33'± West of the centerline of 172nd Avenue & 32'± South of the centerline of Timberview Drive.

BENCHMARK #696 ELEV. = 604.20 (NAVD88)
Top of Southeast flange bolt under "E" in "EJIW" on hydrant, 1.1'± above grade. Located 24'± Southeasterly of the centerline of Dune View Drive & 350'± South of the centerline of Timberview Drive.

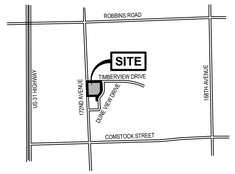

LOCATION MAP

NOT TO SCALE

LEGEND

△	Benchmark		Sign
	Catch Basin - Square	(S)	Sanitary Sewer Manhole
C	Cable Riser	(D)	Stormwater Manhole
	Culvert	TR	Transformer
	Deciduous Tree		Utility Pole
EM	Electric Meter	VM	Water Meter
	Evergreen Tree	VV	Water Valve
GM	Gas Meter	OH	Overhead Utility
	Guy Anchor	SS	Sanitary
	Hydrant	ST	Storm
	Iron - Found		Tree
	Light Pole		Asphalt
(H)	Manhole		Concrete
SB	Soil Boring		Building

REMOVAL / DEMOLITION NOTES

1. REMOVE EXISTING CONCRETE CURB & GUTTER TO NEAREST CENTRAL JOINT
2. REMOVE EXISTING TREES/SHRUBS
3. SAWCUT & REMOVE EXISTING ASPHALT PATH
4. SAWCUT & REMOVE EXISTING ASPHALT

EXISTING GRADE CONTOUR
EXISTING BITUMINOUS REMOVAL
EXISTING CONCRETE REMOVAL
EXISTING TREE REMOVAL

0' 10' 20' 40'
SCALE: 1" = 20'

REMOVAL / DEMOLITION NOTES

1) THE CONTRACTOR SHALL NOTIFY THE UTILITY COMPANIES AT LEAST THREE WEEKS PRIOR TO THE BEGINNING OF CONSTRUCTION OPERATIONS. THERE ARE EXISTING UNDERGROUND UTILITIES WHICH CROSS THE PROPOSED REPLACEMENT WORK AREAS. ALTHOUGH THEIR EXACT LOCATION CANNOT BE DETERMINED, IT IS KNOWN THESE UTILITIES ARE LOCATED WHERE DIGGING IS REQUIRED. THE CONTRACTOR SHALL CONDUCT THE REQUIRED EXCAVATION IN THESE AREAS WITH EXTREME CAUTION.
2) ALL EXISTING UTILITY INFORMATION SHOWN IS TAKEN FROM EXISTING RECORDS, AND FIELD VERIFIED WHERE ACCESSIBLE ONLY. INFORMATION OBTAINED FROM EXISTING RECORDS MAY NOT BE COMPLETE OR ACCURATE. THE LOCATION OF ALL EXISTING UTILITIES SHOWN ON THIS PLAN HAVE BEEN DETERMINED FROM THE BEST INFORMATION AVAILABLE AND ARE GIVEN FOR THE CONVENIENCE OF THE CONTRACTOR. THE ENGINEER ASSUMES NO RESPONSIBILITY FOR THEIR ACCURACY. THE CONTRACTOR SHALL FIELD VERIFY FOR ACCURACY, LOCATION AND CONDITION.
3) BEFORE ANY WORK IS STARTED ON THE PROJECT AND AGAIN BEFORE FINAL ACCEPTANCE BY THE TOWNSHIP AND BY THE OWNER, REPRESENTATIVES OF THE TOWNSHIP, THE OWNER AND THE CONTRACTOR SHALL MAKE AN INSPECTION OF THE EXISTING SEWERS WITHIN THE WORK LIMITS WHICH ARE TO REMAIN IN SERVICE AND WHICH MAY BE AFFECTED BY THE WORK. THE CONDITION OF THE EXISTING UTILITIES AND THEIR APPURTENANCES SHALL BE DETERMINED FROM FIELD OBSERVATIONS AND EXISTING VIDEO TAPES. RECORDS OF THE INSPECTIONS SHALL BE KEPT IN WRITING BY THE CONTRACTOR.
4) THE CONTRACTOR IS RESPONSIBLE FOR OBTAINING ALL PERMITS REQUIRED FOR DEMOLITION WORK.
5) ALL EXISTING UTILITIES, SEWERS AND WATER LINES ARE TO REMAIN UNDISTURBED UNLESS OTHERWISE NOTED ON THE PLANS. THE CONTRACTOR SHALL CONTACT AND COORDINATE WITH ALL APPLICABLE UTILITY COMPANIES, MUNICIPALITIES AND AGENCIES BEFORE COMMENCING ANY WORK.
6) THE CONTRACTOR SHALL COORDINATE WITH ALL UTILITY COMPANIES REGARDING REMOVAL OF EXISTING POLES, OVERHEAD WIRES, UNDERGROUND UTILITIES, GUY WIRES, GAS LINES, ETC. ALL ADJUSTMENT OR RECONSTRUCTION WORK, EXCEPT FOR THOSE STRUCTURES OTHERWISE NOTED ON THE PLANS, SHALL BE PERFORMED BY THE CONTRACTOR. EXISTING APPURTENANCES SUCH AS UTILITY POLES AND VALVES BOX SHALL NOT BE DISTURBED BY THE CONTRACTOR DURING CONSTRUCTION.
7) THE CONTRACTOR SHALL MAINTAIN EXISTING UTILITY SERVICE TO ALL ADJOINING PROPERTIES.
8) ALL DEBRIS SHALL BE REMOVED FROM THE SITE, AND NO STOCKPILING ON SITE SHALL BE ALLOWED UNLESS APPROVED BY THE OWNER OR THEIR REPRESENTATIVES.
9) THE CONTRACTOR SHALL LIMIT SAWCUT AND PAVEMENT REMOVAL TO ONLY THOSE AREAS WHERE REQUIRED OR AS SHOWN. ALL PAVEMENTS TO BE REMOVED SHALL BE SAWCUT AND REMOVED TO FULL DEPTH AT ALL PAVEMENT LIMITS OR EXISTING JOINTS. IF ANY DAMAGE IS INCURRED TO ANY OF THE SURROUNDING PAVEMENT, THE CONTRACTOR SHALL BE RESPONSIBLE FOR ITS REMOVAL AND REPAIR AT NO ADDITIONAL COST TO ANYONE ELSE, INCLUDING THE CITY OR OWNER.
10) ASPHALT AREAS SHOWN TO BE SAWCUT AND REMOVED FULL DEPTH ARE ACTUAL FACE OF PROPOSED CURBS. IT WILL BE NECESSARY TO MAKE OFF-SET SAWCUTS TO PROVIDE CLEARANCE FOR PROPOSED CURBS. THE CONTRACTOR SHALL DETERMINE THE AMOUNT OF OFF-SET NECESSARY TO CONSTRUCT THE PROPOSED CURBS. ADDITIONAL CUTS MAY BE DESIRED TO FACILITATE THE REMOVAL OF THE EXISTING PAVEMENT, BUT THERE WILL BE NO EXTRA PAYMENT FOR ADDITIONAL CUTS. PAVEMENT SHALL BE REMOVED WITHOUT DAMAGING OR UNDERMINING THE REMAINING PAVEMENT. IF ADJACENT PAVEMENT IS DAMAGED, THE CONTRACTOR SHALL MAKE ADDITIONAL FULL DEPTH SAWCUTS AND REMOVE THE DAMAGE AREAS AS NECESSARY.
11) ALL PAVEMENT REMOVAL AREAS SHALL BE FULL PAVEMENT CROSS-SECTION REMOVAL DOWN TO NATIVE SOIL LAYER IN ACCORDANCE WITH THE GEOTECHNICAL REPORT DATED MONTH/DAY/YEAR.
12) ALL TREES WITHIN THE GRADING LIMITS SHALL BE REMOVED UNLESS OTHERWISE NOTED.

NEDERVELD
www.nederveld.com
800.222.1868
GRAND RAPIDS
217 Grandville Ave., Suite 302
Grand Rapids, MI 49503
Phone: 616.575.5190
ANN ARBOR
CHICAGO
COLUMBUS
HOLLAND
INDIANAPOLIS
ST. LOUIS

PREPARED FOR:
Hudsonville Professional Center, LLC
Dr. Brad Dykstra

3250 Central Boulevard
Hudsonville, MI 49426
Phone: 616.669.6600

REVISIONS:

Title: Preliminary PUD Amendment		V. Date: 06.04.18
Drawn: Brad M.	Checked: Kyle W.	S. Date: 06.04.18
Title: Township Review Comments		V. Date: 07.19.18
Drawn: Brad M.	Checked: Kyle W.	S. Date: 07.19.18
Title: Township Review Comments		V. Date: 08.10.18
Drawn: Brad M.	Checked: Kyle W.	S. Date: 08.10.18

Grand Haven Professional Center

Demolition Plan

15018 172ND AVENUE
PART OF THE NORTHEAST 1/4 OF SECTION 33, T8N, R16W,
GRAND HAVEN TOWNSHIP, OTTAWA COUNTY, MICHIGAN

STAMP:
STATE OF MICHIGAN
KYLE D. WILSON
ENGINEER
No. 37827
LICENSED PROFESSIONAL ENGINEER

PROJECT NO:
16201809

SHEET NO:
C-203

BM 8/30/18 15:26
G:\201809\CPI.dwg

© 2016 Nederveld, Inc.

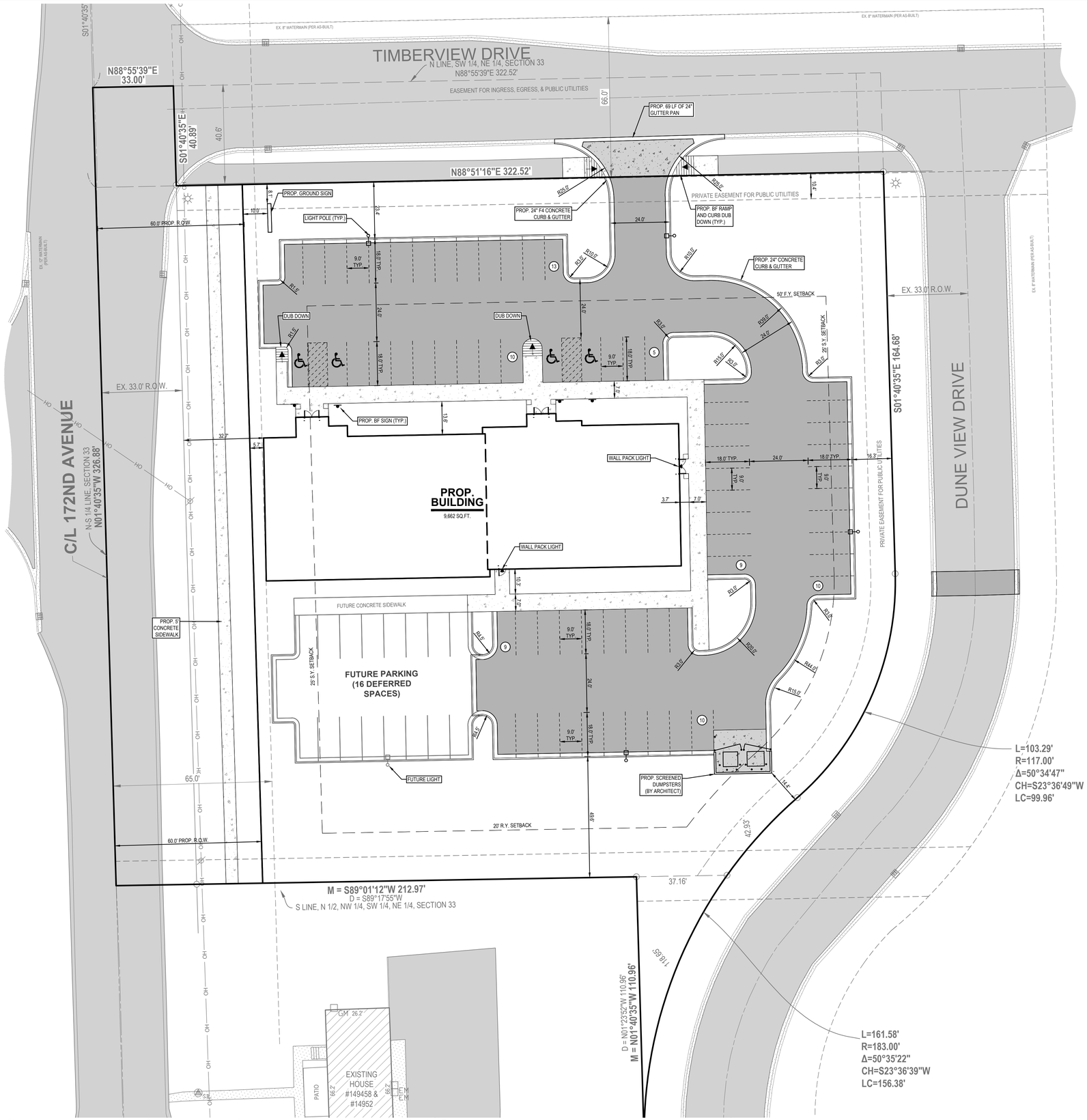

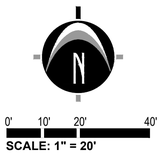

LEGEND

- EXISTING BITUMINOUS
- EXISTING CONCRETE
- PROPOSED BITUMINOUS
- PROPOSED CONCRETE (STANDARD DUTY)
- PROPOSED CONCRETE (HEAVY DUTY)
- PROPOSED LIGHT POLE
- PROPOSED WALL PACK LIGH

GENERAL NOTES

1) ZONING OF PROPERTY: PUD
   PUD ZONING REQUIREMENTS
   SETBACKS
   A) FRONT YARD = 50 FT. (TIMBERVIEW DR.)
   B) SIDE YARD = 25 FT. (172ND AVE.)
   SIDE YARD 2 = 25 FT. (DUNEVIEW DR.)
   REAR YARD = 20 FT. (SOUTH BOUNDARY)
2) SUMMARY OF LAND USE:
   A) TOTAL ACREAGE = 1.68 AC. (73,500 SQ.FT.) (EXCLUDING R.O.W.)
   B) AREA OF PROPOSED BUILDING = 9,662 SQ.FT. (1ST FLOOR)
   C) BUILDING HEIGHT = APPROX. 25'-10".
   D) LOT COVERAGE = 13.15%
   E) GROSS PAVEMENT AREA = APPROX. 22,133 SQ.FT. (DEFERRED PAVEMENT AREA = 4,303 SQ.FT.)
   F) GROSS CONCRETE AREA = APPROX. 3,400 SQ.FT.
   G) ZONING OF PARCELS TO SOUTH AND WEST = RR (SOUTH) + PUD (WEST)
   ZONING OF PARCELS TO NORTH AND EAST = PUD
3) PARKING REQUIREMENTS:
   A) MINIMUM REQUIRED SPACE PER TOWNSHIP = 9'x18' (24' AISLE)
   B) TYPICAL PARKING SPACE PROVIDED = 9'x18' (24' AISLE)
   C) TYPICAL BARRIER FREE SPACE = 13'x18'
   D) NUMBER OF SPACES REQUIRED = 149 (BASED ON CITY REQUIREMENTS)
   E) NUMBER OF SPACES PROVIDED = 66 + 16 (DEFERRED) = 82 TOTAL
4) THIS PROJECT IS NOT LOCATED IN THE 100 YEAR FLOOD PLAIN, BASED ON THE NATIONAL FLOOD INSURANCE PROGRAM RATE MAPS
5) BEST MANAGEMENT PRACTICES WILL BE UTILIZED DURING AND AFTER CONSTRUCTION OF THE PROJECT. MEASURES WILL INCLUDE THE USE OF SEEDING AND MULCHING, SEDIMENT INLET FILTERS, COMPACTION AND PAVING. THE OWNER OF THE SUBJECT PARCEL SHALL HAVE THE RESPONSIBILITY TO MAINTAIN THE PERMANENT SOIL EROSION PROTECTION MEASURES.
6) UTILITIES SHOWN ARE APPROXIMATE LOCATIONS DERIVED FROM ACTUAL MEASUREMENTS OR AVAILABLE RECORDS. THEY SHOULD NOT BE INTERPRETED TO BE EXACT LOCATIONS NOR SHOULD IT BE ASSUMED THAT THEY ARE THE ONLY UTILITIES IN THIS AREA.
7) CONTRACTOR TO FIELD VERIFY ALL INVERTS.
8) ALL LIGHTING SHALL BE SHIELDED FROM ALL ADJACENT PROPERTIES. PROPOSED LIGHTING SHALL CONSIST OF WALL-MOUNTED LIGHTS AND LIGHT POLES, BOTH FITTED WITH SHOEBOX TYPE FIXTURES. THE POLE HEIGHT SHALL BE 18' ON A 2' CONCRETE BASE FOR A TOTAL MOUNT HEIGHT OF 20'
9) THE PERMANENT PARCEL NUMBER FOR THE SITE IS 70-03-33-200-072.
   THE ADDRESS OF THE PROPERTY IS 15018 172ND AVE.
10) NO FENCES OR WALLS OTHER THAN WHAT IS SHOWN ON THE SITE PLAN ARE PROPOSED AT THIS TIME.

NEDERVELD
www.nederveld.com
800.222.1868
GRAND RAPIDS
217 Grandville Ave., Suite 302
Grand Rapids, MI 49503
Phone: 616.575.5190
ANN ARBOR
CHICAGO
COLUMBUS
HOLLAND
INDIANAPOLIS
ST. LOUIS

PREPARED FOR:

Hudsonville Professional Center, LLC
Dr. Brad Dykstra

3250 Central Boulevard
Hudsonville, MI 49426
Phone: 616.669.6600

REVISIONS:

Title: Preliminary PUD Amendment		V. Date: 06.04.18
Drawn: Brad M.	Checked: Kyle W.	S. Date: 06.04.18
Title: Township Review Comments		V. Date: 07.19.18
Drawn: Brad M.	Checked: Kyle W.	S. Date: 07.19.18
Title: Township Review Comments		V. Date: 08.10.18
Drawn: Brad M.	Checked: Kyle W.	S. Date: 08.10.18

Grand Haven Professional Center

Site Layout Plan

15018 172ND AVENUE

PART OF THE NORTHEAST 1/4 OF SECTION 33, T8N, R16W, GRAND HAVEN TOWNSHIP, OTTAWA COUNTY, MICHIGAN

STAMP:

STATE OF MICHIGAN
KYLE D. WILSON
ENGINEER
No. 37827
LICENSED PROFESSIONAL ENGINEER

PROJECT NO:
16201809

SHEET NO:
C-205

16201809-CP1.dwg BM 8/9/2018 15:26

© 2016 Nederveld, Inc.

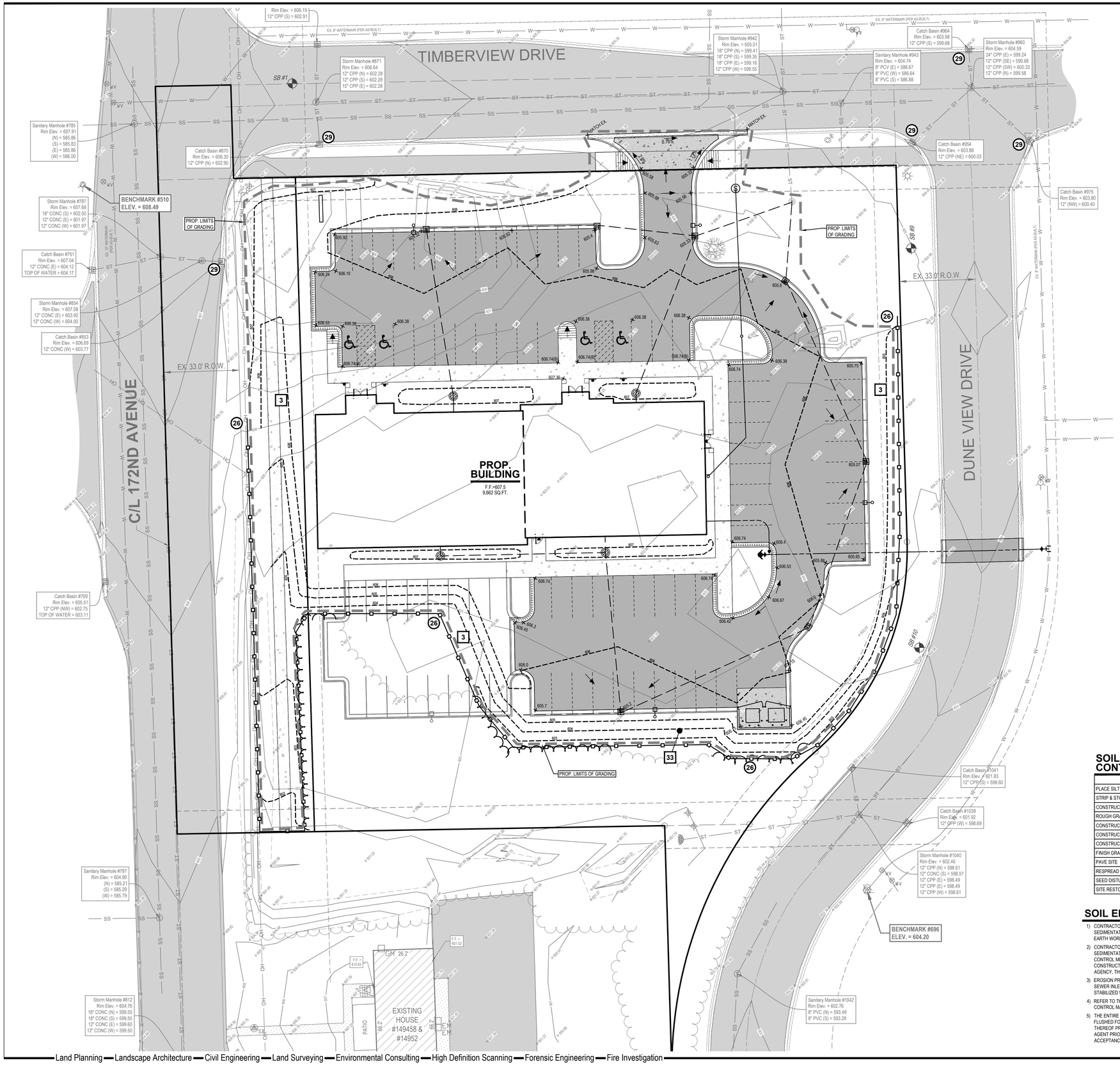

LOCATION MAP

NOT TO SCALE

LEGEND

- EX. GRADE CONTOUR
- PROP. GRADE CONTOUR
- 778.00 PROP. GRADE ELEV.
- 778.00(B) PROP. GRADE ELEV. (BLACKTOP)
- EX. BITUMINOUS
- EX. CONCRETE
- PROPOSED BITUMINOUS (STANDARD DUTY)
- PROPOSED CONCRETE (STANDARD DUTY)
- PROPOSED CONCRETE (HEAVY DUTY)
- PROP. STORM SEWER
- PROP. SANITARY SEWER
- PROP. WATERMAIN
- FLOW DIRECTION
- PROP. LIMITS OF GRADING
- SPILL CURB
- SILT FENCE

0' 10' 20' 40'

SCALE: 1" = 20'

SOIL EROSION CONTROL SCHEDULE 2018 / 2109

	SEP	OCT	NOV	DEC	JAN	FEB	MAR	APR	MAY	JUN	JUL	AUG
PLACE SILT FENCE												
STRIP & STOCKPILE TOPSOIL												
CONSTRUCT CONNECTION TO STORM SEWER												
ROUGH GRADE SITE												
CONSTRUCT BUILDING FOUNDATION AND BUILDING												
CONSTRUCT IMPROVEMENTS AROUND BUILDING												
CONSTRUCT UTILITY LINES TO BUILDING												
FINISH GRADE SITE												
PAVE SITE												
RESPREAD TOPSOIL/COMPACTION												
SEED DISTURBED AREAS												
SITE RESTORATION/CLEAN UP												

SOIL EROSION AND SEDIMENTATION CONTROL NOTES

1) CONTRACTOR SHALL POSSESS THE SOIL EROSION AND SEDIMENTATION CONTROL PERMIT PRIOR TO START OF ANY EARTH WORK.
2) CONTRACTOR SHALL MODIFY THIS SOIL EROSION AND SEDIMENTATION CONTROL PLAN TO SHOW THE ADDITIONAL CONTROL MEASURES INTENDED TO BE USED DURING CONSTRUCTION. SUBMIT MODIFICATIONS TO THE CONTROLLING AGENCY, THE OWNER, AND THE ENGINEER.
3) EROSION PROTECTION SHALL BE PROVIDED AT ALL STORM SEWER INLETS AND OUTLETS. ALL BARE EARTH SHALL BE STABILIZED WITH SEEDING.
4) REFER TO THE M.D.O.T. "SOIL EROSION AND SEDIMENTATION CONTROL MANUAL" (APRIL 2006) FOR ADDITIONAL INFORMATION
5) THE ENTIRE STORM SEWER SYSTEM SHALL BE CLEANED AND FLUSHED FOLLOWING CONSTRUCTION AND PAID RECEIPT THEREOF PROVIDED TO THE ENGINEER AND COUNTY SESC AGENT PRIOR TO FINAL PAYMENT TO THE CONTRACTOR OR FINAL ACCEPTANCE OF THE CONSTRUCTION BY THE OWNER.

3	PERMANENT/TEMPORARY SEEDING
14	GRAVEL ACCESS APPROACH
26	GEOTEXTILE SILT FENCE
29	INLET PROTECTION FABRIC DROP

○ = TEMPORARY MEASURE
□ = PERMANENT MEASURE
REFER TO MDOT STANDARD PLAN R-96-D

NEDERVELD
www.nederveld.com
800.222.1868
GRAND RAPIDS
217 Grandville Ave., Suite 302
Grand Rapids, MI 49503
Phone: 616.575.5190
ANN ARBOR
CHICAGO
COLUMBUS
HOLLAND
INDIANAPOLIS
ST. LOUIS

PREPARED FOR:

Hudsonville Professional Center, LLC
Dr. Brad Dykstra

3250 Central Boulevard
Hudsonville, MI 49426
Phone: 616.669.6600

REVISIONS:

Title: Preliminary PUD Amendment		V. Date: 06.04.18
Drawn: Brad M.	Checked: Kyle W.	S. Date: 06.04.18
Title: Township Review Comments		V. Date: 07.19.18
Drawn: Brad M.	Checked: Kyle W.	S. Date: 07.19.18
Title: Township Review Comments		V. Date: 08.10.18
Drawn: Brad M.	Checked: Kyle W.	S. Date: 08.10.18

Grand Haven Professional Center

S.E.S.C. & Grading Plan

15018 172ND AVENUE

PART OF THE NORTHEAST 1/4 OF SECTION 33, T8N, R16W, GRAND HAVEN TOWNSHIP, OTTAWA COUNTY, MICHIGAN

STAMP:

STATE OF MICHIGAN
KYLE D. WILSON
ENGINEER
No. 37827
LICENSED PROFESSIONAL ENGINEER

PROJECT NO:
16201809

SHEET NO:
C-300

BM 9/20/18 15:26
15201809-CPI.dwg

© 2016 Nederveld, Inc.

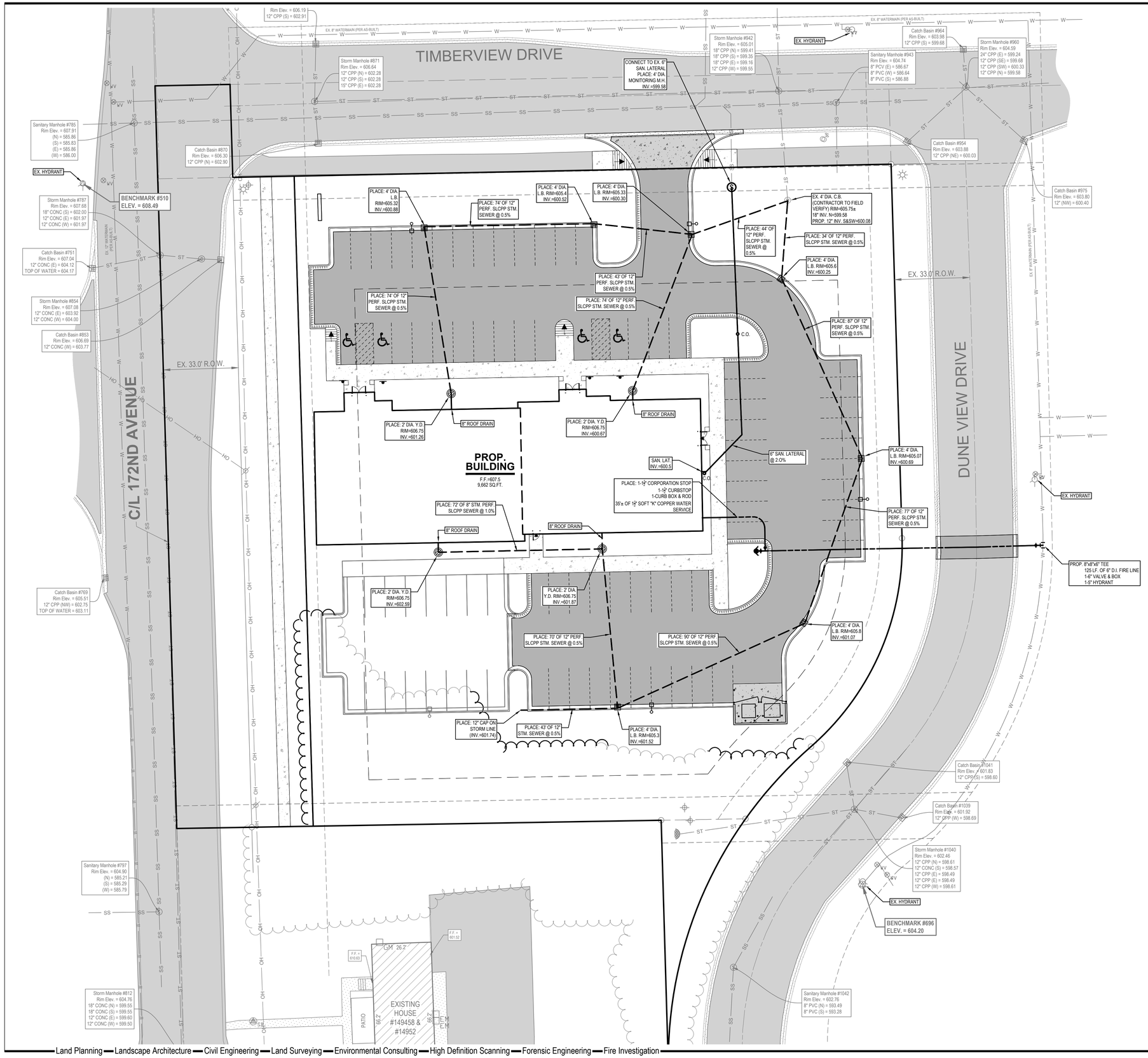

LEGEND

- EX. BITUMINOUS
- EX. CONCRETE
- PROPOSED BITUMINOUS
- PROPOSED CONCRETE (STANDARD DUTY)
- PROPOSED CONCRETE (HEAVY DUTY)
- PROP. STORM SEWER
- PROP. SANITARY LATERAL
- PROP. WATER SERVICE

N

0' 10' 20' 40'

SCALE: 1" = 20'

NEDERVELD
www.nederveld.com
800.222.1868
GRAND RAPIDS
217 Grandville Ave., Suite 302
Grand Rapids, MI 49503
Phone: 616.575.5190
ANN ARBOR
CHICAGO
COLUMBUS
HOLLAND
INDIANAPOLIS
ST. LOUIS

PREPARED FOR:

Hudsonville Professional Center, LLC
Dr. Brad Dykstra

3250 Central Boulevard
Hudsonville, MI 49426
Phone: 616.669.6600

REVISIONS:

Title: Preliminary PUD Amendment		V. Date: 06.04.18
Drawn: Brad M.	Checked: Kyle W.	S. Date: 06.04.18
Title: Township Review Comments		V. Date: 07.19.18
Drawn: Brad M.	Checked: Kyle W.	S. Date: 07.19.18
Title: Township Review Comments		V. Date: 08.10.18
Drawn: Brad M.	Checked: Kyle W.	S. Date: 08.10.18

Grand Haven Professional Center

Utility Plan

15018 172ND AVENUE

PART OF THE NORTHEAST 1/4 OF SECTION 33, T8N, R16W, GRAND-HAVEN TOWNSHIP, OTTAWA COUNTY, MICHIGAN

STAMP:

STATE OF MICHIGAN
KYLE D. WILSON
ENGINEER
No. 37827
LICENSED PROFESSIONAL ENGINEER

PROJECT NO:
16201809

SHEET NO:
C-400

16201809-CH.dwg BM 8/30/18 15:26

© 2016 Nederveld, Inc.

UTILITY CONSTRUCTION NOTES

1. ALL CATCH BASINS SHALL BE PROVIDED WITH A MINIMUM 2' SUMP.
2. ALL STORM SEWER SHALL BE SMOOTH LINED CORRUGATED POLYETHYLENE PIPE (SLCPP) CONFORMING TO AASHTO M-252 AND M-294 UNLESS OTHERWISE NOTED.
3. 6" UNDERDRAIN SHALL BE PERFORATED PIPE WITH SOCK, MEETING THE REQUIREMENTS OF AASHTO M-252 AND THE GEOTEXTILE SHALL MEET AASHTO M-88 REQUIREMENTS.
4. ALL CATCH BASINS AND MANHOLES SHALL BE CONCRETE, CONFORMING TO ASTM C-478 WITH BUTYL RUBBER GASKETED JOINTS AND BOOT TYPE PIPE CONNECTED, CONFORMING TO ASTM C-923 ARE REQUIRED FOR ALL PIPE CONNECTIONS 24" DIAMETER AND SMALLER.
5. ALL WATERMAIN AND SANITARY SEWER CONSTRUCTION SHALL CONFORM TO GRAND HAVEN TOWNSHIP STANDARD CONSTRUCTION SPECIFICATIONS, INCLUDING POST CONSTRUCTION VIDEO INSPECTION OF THE SANITARY SEWER SYSTEM.

CONSTRUCTION NOTES

1) ALL CONSTRUCTION AND MATERIAL SPECIFICATIONS INCLUDED FOR THIS PROJECT SHALL BE IN ACCORDANCE WITH THE MDOT CONSTRUCTION AND MATERIALS SPECIFICATIONS (LATEST EDITION) AND THE ORDINANCES OF THE TOWNSHIP. WHERE CONFLICTS OCCUR IN THE ABOVE, THE TOWNSHIP SHALL BE THE GOVERNING AUTHORITY.
2) SOIL BORINGS HAVE BEEN PERFORMED BY THE OWNER AND SHALL BE PROVIDED TO THE CONTRACTOR. VARIATION IN EXISTING SOIL CONDITIONS MAY IMPACT THE EARTHWORK QUANTITIES IF UNUSABLE SOILS ARE ENCOUNTERED DURING CONSTRUCTION. REFER TO GEOTECHNICAL REPORT, IF ANY, FOR FINAL DESIGN SPECIFICATIONS.
3) THE CONTRACTOR SHALL BE RESPONSIBLE FOR ALL DAMAGES TO THE EXISTING WATER AND SEWERAGE SYSTEM RESULTING FROM NON-CONFORMANCE WITH THE APPLICABLE STANDARDS OR THROUGH GENERAL NEGLIGENCE.
4) ALL WORK, INCLUDING INSPECTIONS AND TESTING COST REQUIRED FOR REMOVAL, RELOCATION OR NEW CONSTRUCTION FOR PRIVATE OR PUBLIC UTILITIES, WILL BE DONE BY AND AT THE EXPENSE OF THE CONTRACTOR AND INCLUDED IN THE BID PRICE FOR THE VARIOUS WORK ITEMS UNLESS OTHERWISE NOTED. THE CONTRACTOR SHALL BE RESPONSIBLE FOR OBTAINING AND PAYING FOR ALL NECESSARY PERMITS FROM THE TOWNSHIP AND COUNTY AND ANY OTHER AGENCY FOR ALL WORK DONE BY THE CONTRACTOR.
5) ANY DEFECTS IN THE CONSTRUCTION, INCLUDING MATERIALS OR WORKMANSHIP, SHALL BE REPLACED OR CORRECTED BY REMOVAL AND REPLACEMENT OR OTHER APPROVED METHODS PRIOR TO ACCEPTANCE BY THE TOWNSHIP OR OWNER WITHOUT ANY ADDITIONAL COST TO THE TOWNSHIP OR OWNER.
6) ALL LAWN AREAS REMOVED OR DISTURBED SHALL BE REPLACED WITH TOPSOIL AND SOD WHERE NEEDED AND SHALL BE RESEEDED AND MULCHED IF SATISFACTORY RE-ESTABLISHMENT OF LAWN DOES NOT OCCUR.
7) ALL PUNCH LIST AND DEFICIENCY WORK SHALL BE COMPLETED WITHIN 1 MONTH OF THE END OF CONSTRUCTION.
8) THE CONTRACTOR SHALL OBTAIN A STREET OPENING PERMIT FROM THE TOWNSHIP BEFORE BEGINNING WORK WITHIN ANY PUBLIC STREET RIGHT-OF-WAY.
9) THE CONTRACTOR SHALL MAINTAIN A CURRENT SET OF CONSTRUCTION DRAWINGS ON SITE AT ALL TIMES.
10) THESE PLANS HAVE BEEN DEVELOPED FOR ELECTRONIC FIELD LAYOUT. DIMENSIONS SHOWN ARE FOR GRAPHIC PRESENTATION ONLY AND SHOULD NOT BE USED FOR LAYOUT. CONTACT THE ENGINEER IF ANY DISCREPANCIES BETWEEN THE PLAN AND ELECTRONIC DATA ARE DISCOVERED.
11) THE WORK LIMITS SHOWN ON THESE PLANS ARE FOR PHYSICAL CONSTRUCTION ONLY. THE CONTRACTOR SHALL PROVIDE ALL NECESSARY LIGHTS, BARRICADES, FLAGMEN, ETC. AS REQUIRED TO PERFORM THE REQUIRED WORK. THE INSTALLATION AND OPERATION OF ALL TEMPORARY TRAFFIC CONTROL AND TEMPORARY TRAFFIC CONTROL DEVICES AS REQUIRED SHALL BE PROVIDED BY THE CONTRACTOR WHETHER INSIDE OR OUTSIDE THESE WORK LIMITS. THE CONTRACTOR SHALL FURNISH, ERECT, MAINTAIN AND SUBSEQUENTLY REMOVE SUCH ADDITIONAL TRAFFIC CONTROL DEVICES LOCATED OUTSIDE THE LIMITS OF CONSTRUCTION AS ARE REQUIRED ON THOSE STREETS WHICH ARE USED AS DETOURS, INCLUDING "ROAD CLOSED" SIGNS AND BARRICADES AT THE POINT WHERE THE ROAD IS CLOSED TO THROUGH TRAFFIC.
12) THE CONTRACTOR SHALL PROTECT LOCATION OF ALL PROPERTY PINS AND BENCHMARKS.
13) ALL WORK CONTEMPLATED SHALL AT ALL TIMES BE SUBJECT TO THE DIRECT INSPECTION OF THE TOWNSHIP, OWNER AND THEIR REPRESENTATIVES. THE TOWNSHIP AND OWNER RESERVES THE RIGHT TO HALT ALL CONSTRUCTION ACTIVITY FOR NONCONFORMANCE OF PLANS, SPECIFICATIONS AND OTHER APPLICABLE STANDARDS OR REGULATIONS.
14) PRICES BID PER FOOT FOR ALL PIPES IS COMPACTED IN PLACE REGARDLESS OF SOIL OR ROCK CONDITIONS.
15) CONTRACTOR IS RESPONSIBLE FOR ALL SIGNS, BARRICADES AND SAFETY FENCES TO DETER PEOPLE FROM ENTERING THE WORK AREA AND FOR MAINTAINING AND PROTECTING THE FLOW OF VEHICULAR AND PEDESTRIAN TRAFFIC AROUND THE JOB SITE. TRAFFIC CONTROLS SHALL BE COORDINATED WITH THE POLICE DEPARTMENT AND THE TOWNSHIP.
16) PRIOR TO ANY CONSTRUCTION OR GRADING, A PROTECTIVE BARRIER, FENCE, POST AND/OR SIGNS CLEARLY INDICATING LIMITS OF WORK/DISTURBANCE SHALL BE INSTALLED INDICATING NO TREE REMOVAL OR DISTURBANCES OUTSIDE LIMITS, THE TOWNSHIP AND OWNER SHALL BE CONTACTED UPON DETERMINATION OF LIMITS IN THE FIELD.
17) ALL ROAD SURFACES, EASEMENTS OR RIGHT-OF-WAYS DISTURBED BY CONSTRUCTION OF ANY PART OF THIS IMPROVEMENT ARE TO BE RESTORED COMPLETELY TO THE SATISFACTION OF THE TOWNSHIP AND THE OWNER.
18) NO PARKING OF CONTRACTOR OR CONTRACTOR EMPLOYEE'S VEHICLES ON ANY PUBLIC STREETS SHALL BE PERMITTED.
19) ALL DISTURBED SIGNS, GUARDRAILS, MAIL BOXES, AND DRIVEWAYS SHALL BE REPAIRED OR REPLACED AS DIRECTED BY THE TOWNSHIP AND THE OWNER.
20) DUST CONTROL: THE CONTRACTOR SHALL SUPPLY ALL LABOR, MATERIALS, AND EQUIPMENT NECESSARY SUCH AS CALCIUM CHLORIDE, WATER OR A MOTORIZED DUST-FREE STREET SWEEPING DEVICE TO MAINTAIN ALL ROADWAYS BEING USED FOR ACCESS TO THE CONSTRUCTION SITE AND SHALL ADHERE TO ALL ORDINANCES OF THE TOWNSHIP, COUNTY, MDEQ OR ANY OTHER GOVERNING AUTHORITY.
21) ALL SEWERS, MANHOLES, JUNCTION CHAMBERS AND INLET BASINS MUST BE CLEANED BEFORE ACCEPTANCE BY THE TOWNSHIP AND OWNER.
22) IF MUD, SOIL OR OTHER DEBRIS IS DEPOSITED ON ADJACENT STREETS, ROADS OR OTHER PROPERTY, THE CONTRACTOR SHALL BE RESPONSIBLE FOR THE REMOVAL OF SUCH AT THE END OF EACH WORK DAY OR AS REQUIRED DURING THE WORK DAY.
23) ADJUST TO GRADE OR RECONSTRUCT TO GRADE WORK SHALL INCLUDE THE REMOVAL AND REPLACEMENT OF ANY EXISTING CONCRETE BLOCKOUT PAVEMENT. DAMAGED PAVEMENT DOWELS OR OTHER SUCH LOAD TRANSFERS DEVICES SHALL BE REPLACED AS DIRECTED BY THE COUNTY AND THE ENGINEER.
24) ALL EXISTING CASTINGS FOR STRUCTURES TO BE ADJUSTED OR RECONSTRUCTED TO GRADE SHALL BE FIELD CHECKED AT THE TIME OF CONSTRUCTION AND MARKED SUITABLE FOR SALVAGE AND REUSE OR REPLACED.
25) COMPACTED PREMIUM BACKFILL (MDOT CLASS II SAND) WILL BE REQUIRED AT ALL FILL AREAS OR ANY STREETS WHERE REMOVAL AND REPLACEMENT OF PAVEMENT IS REQUIRED AND FOR ALL UNDERGROUND CONSTRUCTION UNDER ANY DRIVEWAY OR PAVEMENT INCLUDING THE 45 DEGREE ANGLE OF INFLUENCE FROM THE OUTSIDE EDGE OF PAVEMENT OR TOP OF CURB. COMPACTION TESTS SHALL BE REQUIRED EVERY 50 FEET UNDER PAVEMENT. PAVEMENT INCLUDES, BUT NOT LIMITED TO, ROADWAY SURFACES, SIDEWALKS, BIKE WAYS, DRIVEWAYS, SHOULDERS, BUILDINGS, ETC.
26) NO BUILDING MATERIAL, EQUIPMENT, VEHICLES OR CHEMICALS SHALL BE STORED OR PLACED OUTSIDE LIMITS OF WORK/DISTURBANCE.
27) STORMWATER POLLUTION PREVENTION ITEMS SHALL BE IN PLACE PRIOR TO COMMENCING CLEARING OPERATIONS, EARTHWORK GRADING, OR ANY OTHER TYPE OF CONSTRUCTION ACTIVITY.
28) ROOF DRAINS, FOUNDATION DRAINS AND OTHER CLEAN WATER CONNECTIONS TO THE SANITARY SEWER ARE PROHIBITED.
29) CONSTRUCTION NOISE SHALL BE KEPT TO A MINIMUM DURING NIGHTTIME HOURS AND MUST COMPLY WITH MUNICIPAL CODE REQUIREMENTS.

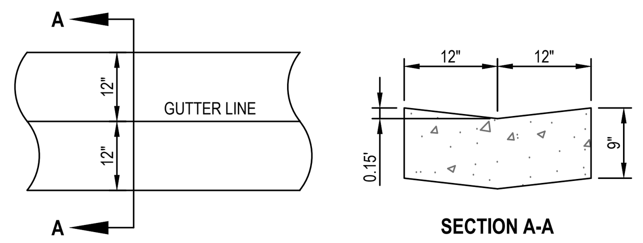

24" CONCRETE GUTTER

N.T.S.

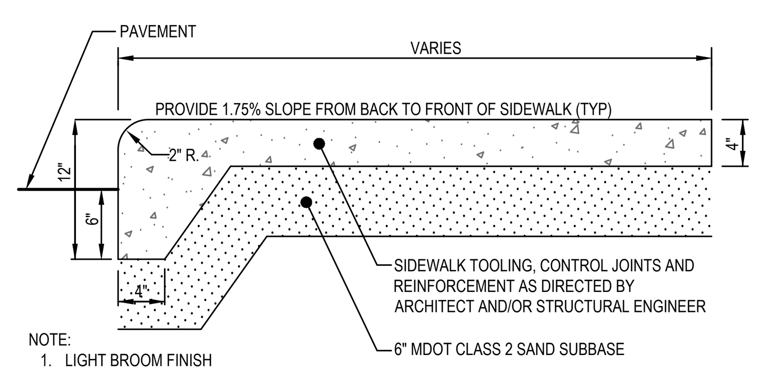

NOTE:
1. LIGHT BROOM FINISH
2. LOCATE CONTROL JOINTS AND EXPANSION JOINTS PER ACI STANDARDS
3. PANEL SIZE SHALL NOT EXCEED 8 FEET
4. PANELS SHALL BE KEPT AS SQUARE AS POSSIBLE WITH THE LENGTH NEVER EXCEEDING 1.25X THE WIDTH
5. 1.0#/CU.YD. FIBER REINFORCEMENT
6. AIR ENTRAINMENT - 6% ± 1%
7. SLUMP 4"±1"

INTEGRAL CURB AND WALK

N.T.S.

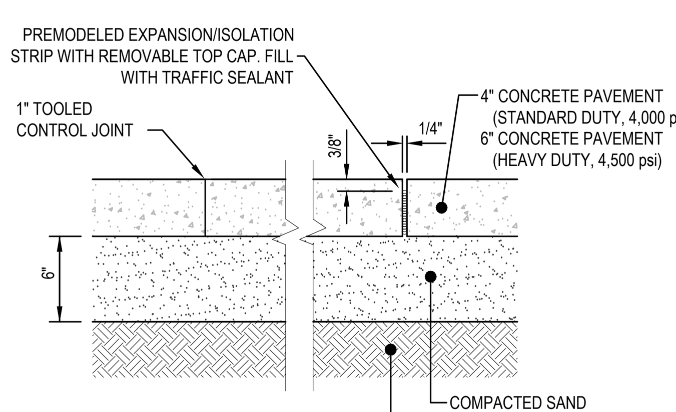

NOTE:
1. LIGHT BROOM FINISH
2. LOCATE CONTROL JOINTS AND EXPANSION JOINTS PER ACI STANDARDS
3. PANEL SIZE SHALL NOT EXCEED 8 FEET
4. PANELS SHALL BE KEPT AS SQUARE AS POSSIBLE WITH THE LENGTH NEVER EXCEEDING 1.25X THE WIDTH
5. 1.0#/CU.YD. FIBER REINFORCEMENT
6. AIR ENTRAINMENT - 6% ± 1%
7. SLUMP 4"±1"

CONCRETE PAVEMENT DETAIL

N.T.S.

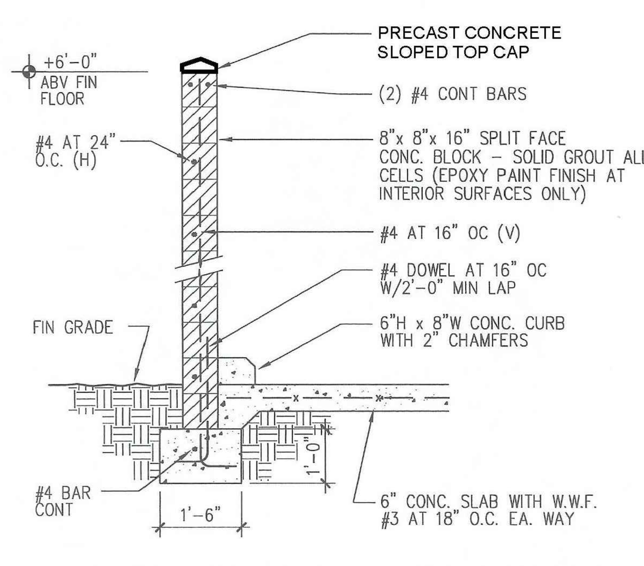

DUMPSTER CONCRETE WALL SECTION

SCALE: 1/2"=1'-0"

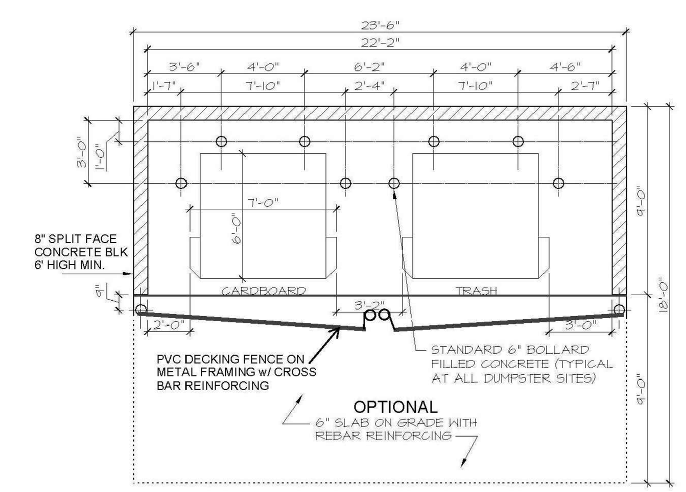

DOUBLE DUMPSTER ENCLOSURE

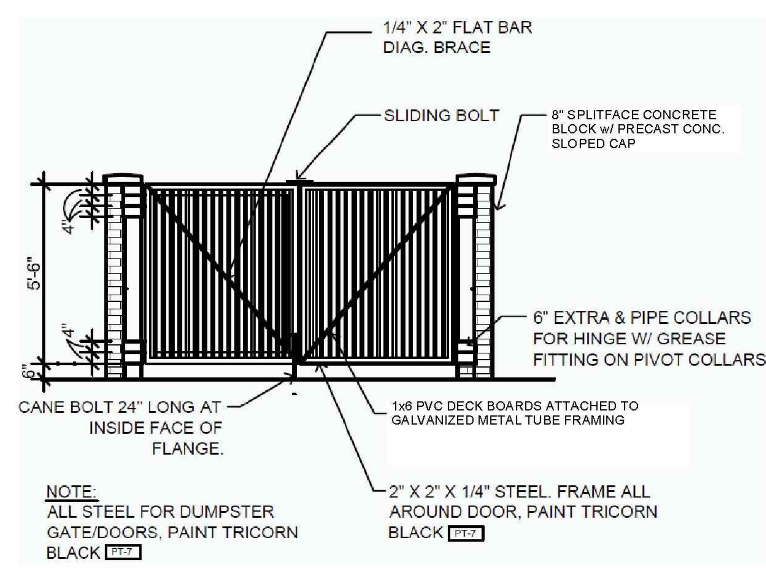

TRASH ENCLOSURE ELEVATION

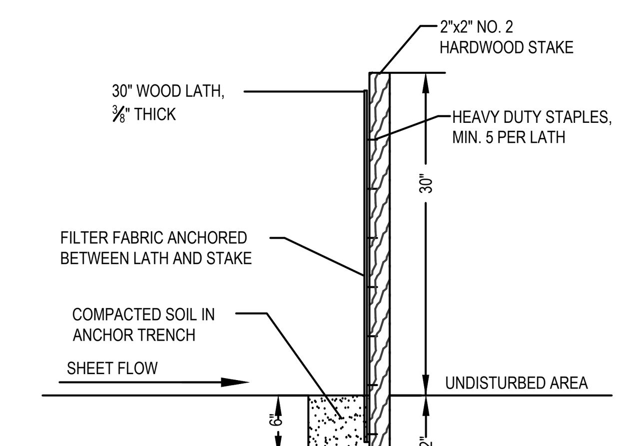

SECTION VIEW

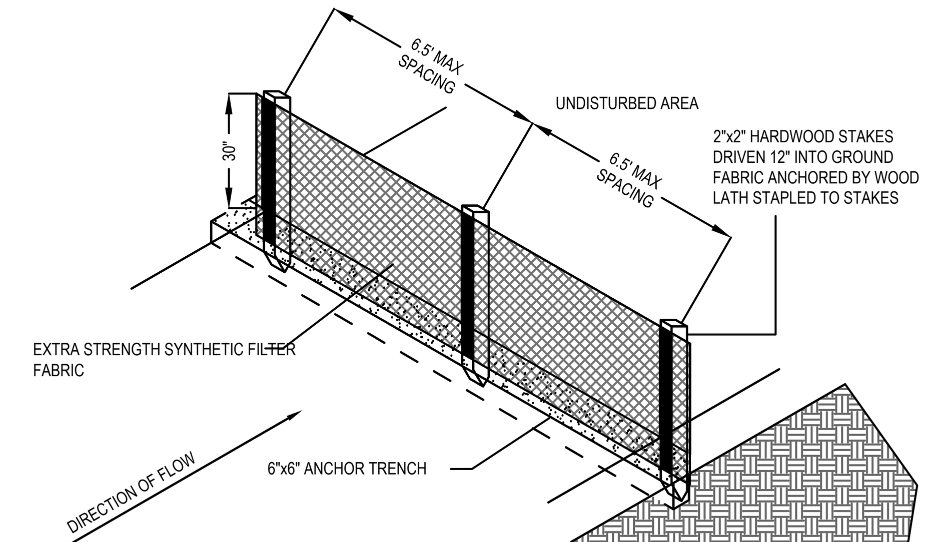

PLAN VIEW

SILT FENCE DETAIL

N.T.S.

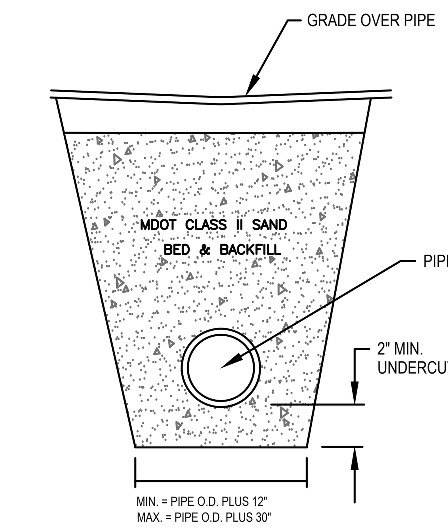

TYPICAL UTILITY TRENCH BED AND BACKFILL DETAILS

N.T.S.

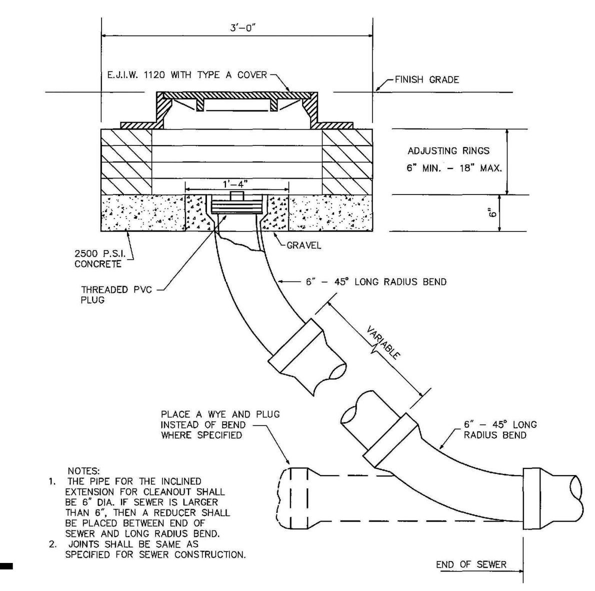

NOTES:
1. THE PIPE FOR THE INCLINED EXTENSION FOR CLEANOUT SHALL BE 6" DIA. IF SEWER IS LARGER THAN 6", THEN A REDUCER SHALL BE PLACED BETWEEN END OF SEWER AND LONG RADIUS BEND.
2. JOINTS SHALL BE SAME AS SPECIFIED FOR SEWER CONSTRUCTION.

SEWER CLEANOUT DETAIL

N.T.S.

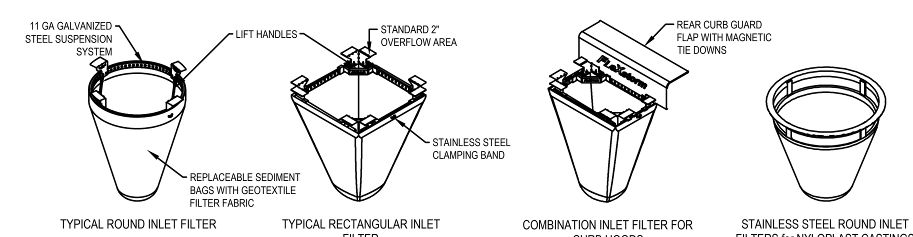

NOTES:
1. ALL FRAMING IS CONSTRUCTED OF CORROSION RESISTANT STEEL (ZINC PLATED OR GALVANIZED) FOR 7 YEAR MINIMUM SERVICE LIFE.
2. UPON ORDERING CONFIRMATION OF THE DOT CALLOUT, PRECAST OR CASTING MAKE AND MODEL, OR DETAILED DIMENSIONAL FORMS MUST BE PROVIDED TO CONFIGURE AND ASSEMBLE YOUR CUSTOMIZED FLEXSTORM INLET FILTER. PART NUMBER ALONE IS NOT SUFFICIENT.
3. FOR WRITTEN SPECIFICATIONS AND MAINTENANCE GUIDELINES VISIT WWW.INLETFILTERS.COM

SPECIFICATIONS FOR STANDARD BAGS BY NOMINAL SIZE

NORMAL BAG SIZE	SOLIDS STORAGE (CuFt)	FILTERED FLOW RATE AT 50% MAX (CFS)	
		FX (WOVEN)	IL (NONWOVEN)
SMALL	16	12	0.90
MEDIUM	2.10	1.70	1.30
LARGE	3.80	2.70	1.90
XL	4.20	3.60	2.60

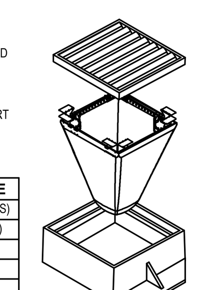

INSTALLATION:
1. REMOVE GRATE
2. DROP FLEXSTORM INLET FILTER ONTO LOAD BEARING LIP OF CASTING OR CONCRETE STRUCTURE
3. REPLACE GRATE

ALL PRODUCTS MANUFACTURED BY INLET & PIPE PROTECTION, INC A DIVISION OF ADS, INC.
WWW.INLETFILTERS.COM
(866) 287-8655 PH
(630) 355-3477 FX
INFO@INLETFILTERS.COM

FLEXSTORM INLET FILTER DETAIL

N.T.S.

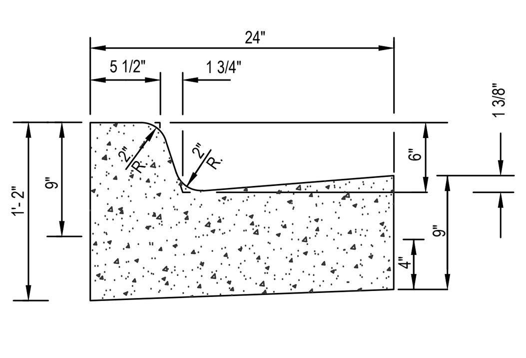

24" CONCRETE CURB & GUTTER DETAIL MDOT R-30-G TYPE F4 (MODIFIED) INSIDE PUBLIC R.O.W.

N.T.S.

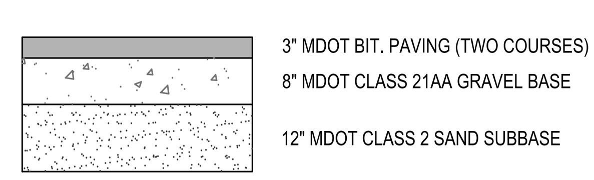

NOTE:
1. REFER TO GEOTECHNICAL REPORT FOR FINAL PAVEMENT DESIGN SPECIFICATION
2. HMA MIXTURE TO BE TIER I OR TIER II
3. BINDER GRADE TO BE A MINIMUM OF PG 58-28

PAVEMENT CROSS SECTION

N.T.S.

R7-8 & R7-8a / WITH 2" SQUARE STEEL POST - **4 EA.**

SIGN QUANTITIES

N.T.S.

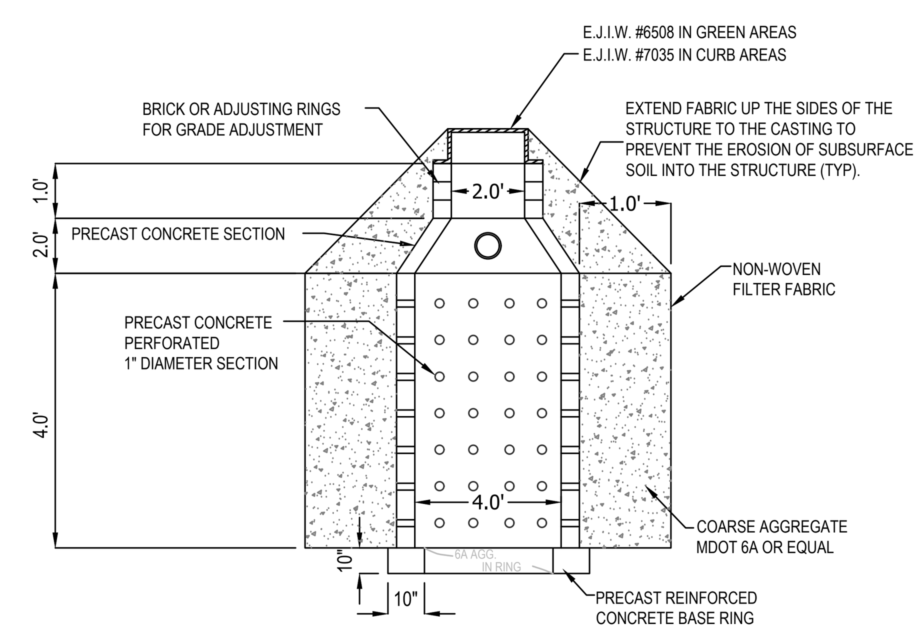

TYPICAL LEACH BASIN DETAIL

N.T.S.

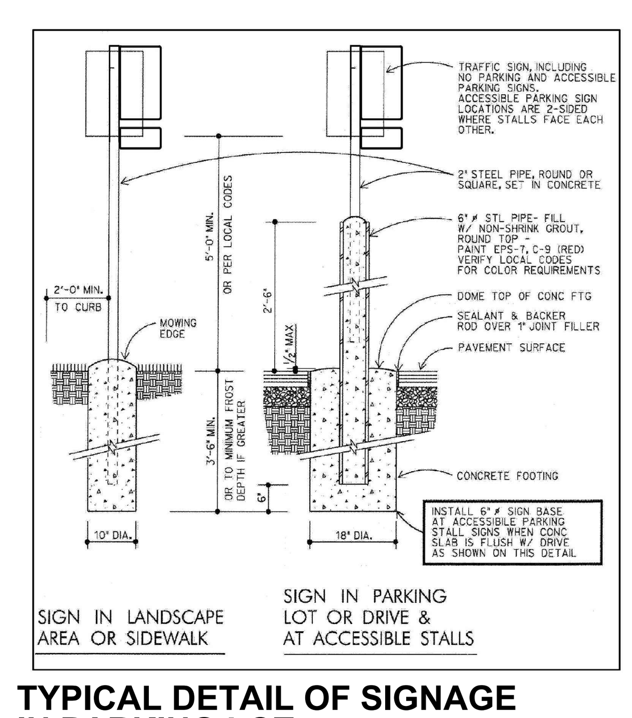

TYPICAL DETAIL OF SIGNAGE IN PARKING LOT

N.T.S.

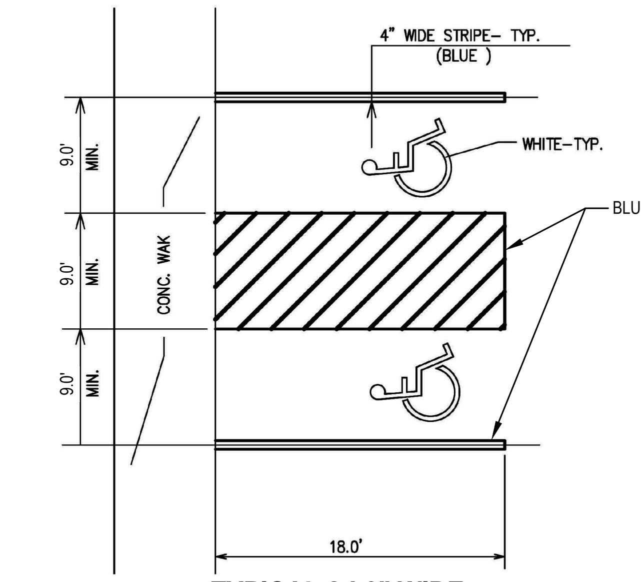

TYPICAL 8-'-0" WIDE HANDICAP VAN PARKING SPACE

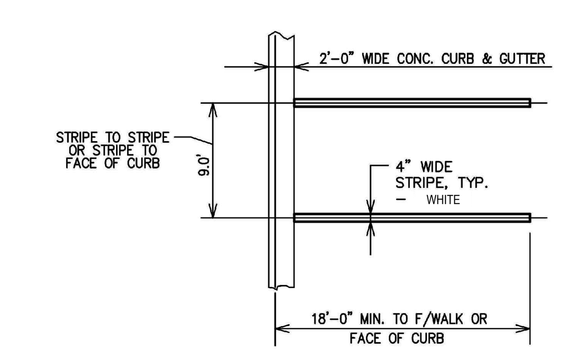

TYPICAL 90° PERIMETER PARKING SPACE

NOTE:
APPLY TWO COATS OF VOC COMPLIANT, M.D.O.T. APPROVED, UNDILUTED SOLVENT BASED, OR LATEX TRAFFIC PAINT TO ALL PAVEMENT MARKINGS. USE MANUFACTURERS RECOMMENDED APPLICATION RATE, WITHOUT ADDITION OF THINNER, WITH A MAXIMUM OF 100 SFT PER GALLON, OR MINIMUM 15 MILS WET FILM THICKNESS, AND 7.5 MILS DRY FILM THICKNESS PER COAT, WITH MINIMUM 30 DAYS BETWEEN APPLICATIONS. SECOND COAT MUST NOT BE APPLIED EARLIER THAN 7 DAYS BEFORE OCCUPANCY.

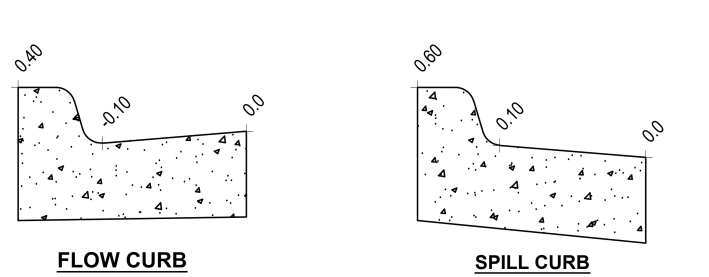

CURB ELEVATION DETAILS

NO SCALE

GRADING NOTES:

1. ESTABLISH PERMANENT BENCH MARK ON-SITE PRIOR TO GRADING.
2. PROPOSED SPOT GRADES ARE TO EDGE OF METAL/TOP OF PAVEMENT UNLESS OTHERWISE NOTED. THE VERTICAL DIFFERENCE BETWEEN PAVEMENT GRADES AND TOP OF CURB GRADES VARY FOR PITCH IN AND PITCH OUT CURB (SEE DETAIL-THIS SHEET).
3. PROPOSED ADA ROUTE SHALL MEET THE STANDARDS SET FORTH IN THE ADA ACCESSIBILITY GUIDELINES FOR BUILDING AND FACILITIES - APPENDIX A TO PART 1191
4. SEE SHEETS C-300 FOR LOCATIONS

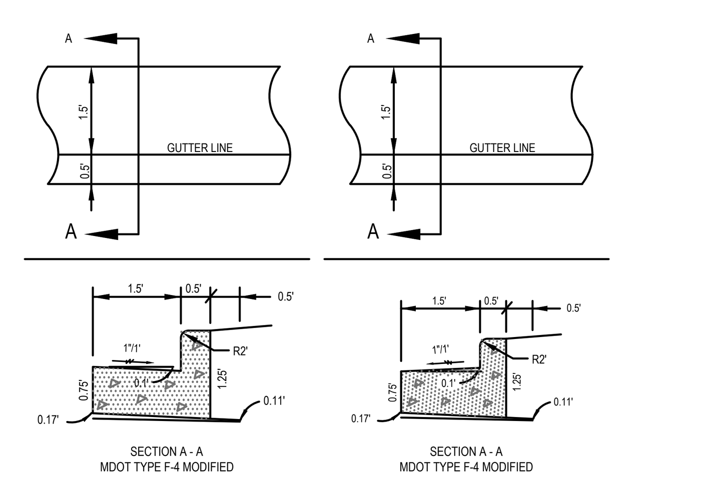

24" CONCRETE CURB AND GUTTER DETAIL OUTSIDE PUBLIC R.O.W.

N.T.S.

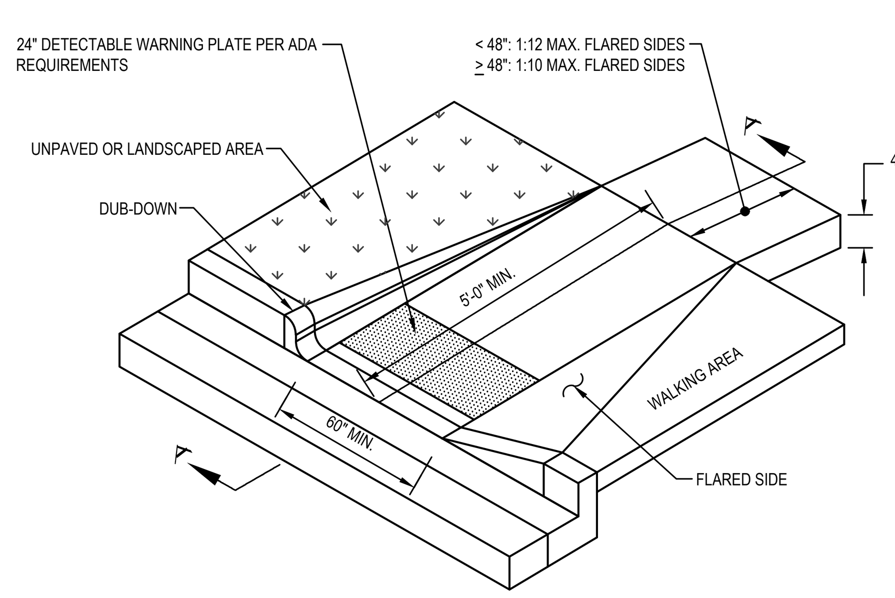

DUB-DOWN OR FLARED SIDE OPTION

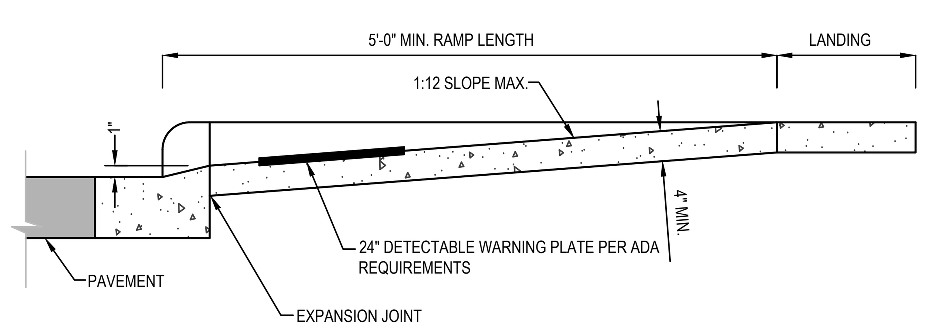

SECTION A-A

DETECTABLE WARNING SIDEWALK RAMP

N.T.S.

NEDERVELD

www.nederveld.com
800.222.1868

GRAND RAPIDS
217 Grandville Ave., Suite 302
Grand Rapids, MI 49503
Phone: 616.575.5190

ANN ARBOR
CHICAGO
COLUMBUS
HOLLAND
INDIANAPOLIS
ST. LOUIS

PREPARED FOR:

Hudsonville Professional Center, LLC
Dr. Brad Dykstra

3250 Central Boulevard
Hudsonville, MI 49426
Phone: 616.669.6600

REVISIONS:

Title: Preliminary PUD Amendment		V. Date: 06.04.18
Drawn: Brad M.	Checked: Kyle W.	S. Date: 06.04.18
Title: Township Review Comments		V. Date: 07.19.18
Drawn: Brad M.	Checked: Kyle W.	S. Date: 07.19.18
Title: Township Review Comments		V. Date: 08.10.18
Drawn: Brad M.	Checked: Kyle W.	S. Date: 08.10.18

Grand Haven Professional Center

Details & Specifications

15018 172ND AVENUE

PART OF THE NORTHEAST 1/4 OF SECTION 33, T8N, R16W, GRAND HAVEN TOWNSHIP, OTTAWA COUNTY, MICHIGAN

STAMP:

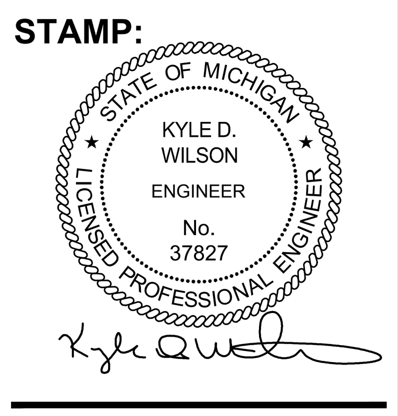

PROJECT NO: 16201809

SHEET NO: C-500

16201809-CP1.dwg BM 8/9/2018 15:26

© 2016 Nederveld, Inc.

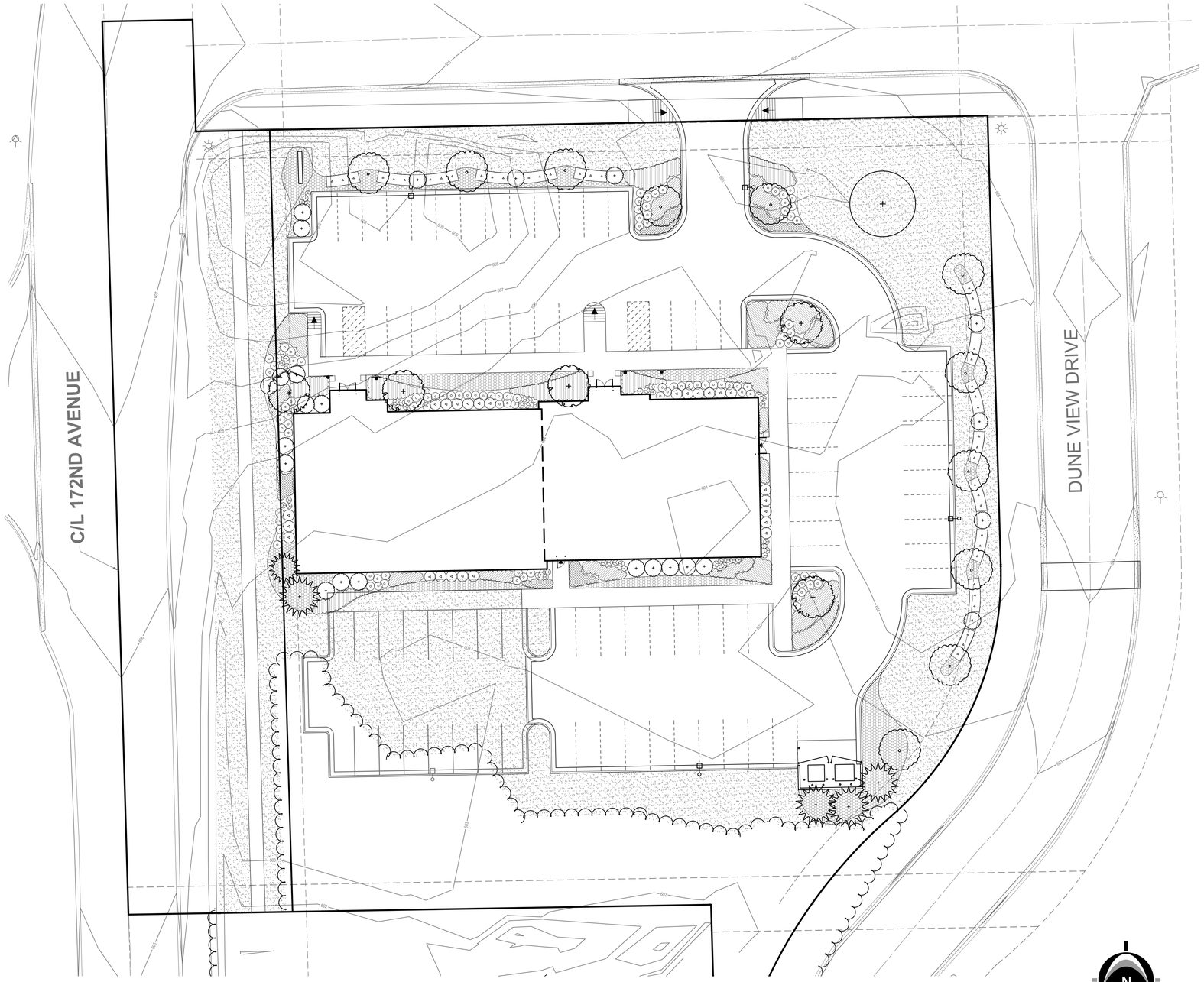

LANDSCAPE LEGEND / SCHEDULE

TREES

SYMBOL	KEY	QUANTITY	SCIENTIFIC NAME	COMMON NAME	SIZE
	AK	5	Abies koreana	Korean Fir	10' hgt. avg.(1)
	GT	1	Gleditsia triacanthos f. inermis	Thornless Honey Locust	3 $\frac{1}{2}$" cal. min.
	MS	5	Magnolia stellata	Star Magnolia	3" cal. min.
	MT	11	Malus 'Thunderchild'	'Thunderchild' Flowering Crabapple	3" cal. min.

(1) Korean Fir shall be planted at varying heights, approximately 8'-12'.

SHRUBS

SYMBOL	KEY	QUANTITY	SCIENTIFIC NAME	COMMON NAME	SIZE
	Ca	24	Cornus alba 'Bailhalo'	Ivory Halo Dogwood	36" ht. min.
(1) (2)	Bg	67	Buxus 'Green Beauty'	'Green Beauty' Boxwood	36" ht. min.

1) Oval pruned boxwood approximately 4' x 4'.

2) Boxwood pruned into continuous rectangular hedge approximately 4' x 4'.

3) All shrubs used for perimeter screening must be planted at a height of 36" above street grade.

PERENNIALS, GRASSES, & GROUND COVERS

SYMBOL	KEY	QUANTITY	SCIENTIFIC NAME	COMMON NAME	SIZE
	ac	226 sf.	Astilbe chinensis 'Visions'	'Visions' Astilbe	1 gal. 12"-18" spc.
	N/A	As Needed(1)	N/A	Wood Mulch	3" depth
	cs	304 sf.	Coreopsis 'Snowberry'	'Snowberry' Tickseed	1 gal. 30"-36" spc.
	dg	545 sf.	Deutzia gracilis 'Nikko'	Dwarf Slender Deutzia	1 gal. 30"-36" spc.
	hm	728 sf.	Heuchera 'Midnight Bayou'	'Midnight Bayou' Coral Bells	1 gal. 18"-24" spc.
	hr	105	Hosta 'Risky Business'	'Risky Business' Hosta	2 gal.
	is	829 sf.	Iberis 'Snowflake'	'Snowflake' Candytuft	1 gal. 12"-18" spc.
	pp	18,929 sf.	Poa pratensis	Kentucky Bluegrass Seed	
	ss	48	Schizachyrium scoparium 'The Blues'	'The Blues' Little Bluestem	2 gal.

(1) All disturbed areas programmed as planting beds shall receive wood mulch to a depth of 3".

LANDSCAPE NOTES

PLANTING NOTES:

1) ALL PLANT MATERIAL SHALL BE LOCALLY NURSERY GROWN NO.1 GRADE AND INSTALLED ACCORDING TO ACCEPTED PLANTING PROCEDURES. ALL PLANT MATERIALS SHALL MEET CURRENT AMERICAN ASSOCIATION OR NURSERYMEN STANDARDS. DO NOT PLANT MATERIALS UNTIL DIRECTED BY OWNER, LANDSCAPE ARCHITECT, AND/OR CONSTRUCTION MANAGER. THE LANDSCAPE ARCHITECT RESERVES THE RIGHT TO REJECT ANY PLANT MATERIAL, FOR ANY REASON BEFORE OR AFTER IT IS INSTALLED.
2) SIZES SPECIFIED ARE MINIMUM SIZES TO WHICH THE PLANTS ARE TO BE INSTALLED.
3) ANY PLANT SUBSTITUTIONS SHALL BE APPROVED BY THE LANDSCAPE ARCHITECT.
4) MAINTENANCE OF LANDSCAPING ITEMS, TREES, AND PLANTS SHALL BE PERFORMED BY THE PROPERTY OWNER OR A QUALIFIED PROFESSIONAL. ALL LANDSCAPING SHALL BE INSTALLED AND MAINTAINED IN ACCORDANCE WITH APPLICABLE MUNICIPAL STANDARDS AND IN ACCORDANCE WITH CURRENT INDUSTRY STANDARDS IN A NEAT, HEALTHY AND WEED FREE CONDITION. ANY DEAD, DISEASED OR DAMAGED PLANT MATERIALS ARE TO BE REPLACED IMMEDIATELY AFTER NOTIFIED TO DO SO.
5) PLANT TREES AND SHRUBS IN ACCORDANCE WITH PLANTING DETAILS. DIG TREE PITS PER DETAILS. PLANT TREES AND SHRUBS AT THE SAME GRADE LEVEL AT WHICH THEY WERE GROWN AT THE NURSERY. IF HEAVY CLAY SOILS ARE EVIDENT, PLANT TREES AND SHRUBS HIGHER, APPROX. 1/4 OF THE ROOT BALL ABOVE GRADE, AND BACKFILL TO TOP OF ROOT BALL.
6) REMOVE ALL TWINE, WIRE, NURSERY TREE GUARDS, TAGS AND INORGANIC MATERIAL FROM ROOT BALLS. REMOVE THE TOP 1/3 OF BURLAP FROM EARTH BALLS AND REMOVE BURLAP FROM AROUND TRUNK.
7) FINELY SHREDDED HARDWARD BARK MULCH, NATURAL COLOR (NON-COLORED), IS REQUIRED FOR ALL PLANTINGS AND PLANTING BEDS. MULCH PER PLANTING DETAILS. MULCH IN PLANT BEDS SHALL BE 3" THICK AT TIME OF INSPECTION AND AFTER COMPACTED BY RAIN OR IRRIGATION. ALL PLANTING BEDS SHALL BE EDGED WITH 6" X 12 GAUGE STEEL LANDSCAPE EDGING.
8) LANDSCAPE CONTRACTOR SHALL BE RESPONSIBLE FOR THE VERIFICATION OF ALL UNDERGROUND AND OVERHEAD UTILITIES. IF A CONFLICT WITH UTILITIES EXIST, NOTIFY OWNER/CONSTRUCTION MANAGER PRIOR TO PLANTING.
9) PLANT MATERIAL SHALL BE GUARANTEED FOR ONE YEAR AFTER PLANTING AND ACCEPTANCE.

TOPSOIL AND TURF NOTES:

1) WHEREVER GROUND IN ITS NATURAL STATE HAS BEEN DISTURBED, APPROVED LANDSCAPING OR GRASS SHALL BE FULLY INSTALLED, AND ESTABLISHED WITHIN A REASONABLE PERIOD OF TIME, BUT NO LONGER THAN ONE GROWING SEASON (UNLESS OTHERWISE NOTED AND APPROVED).
2) DURING EXCAVATION, GRADING, AND INSTALLATION OF REQUIRED LANDSCAPING, ALL SOIL EROSION AND SEDIMENTATION CONTROL REGULATIONS SHALL BE STRICTLY FOLLOWED AND COMPLIED WITH.
3) ALL LAWN AREAS SHALL RECEIVE SOD OR HYDROSEED. TURF SHALL BE INSTALLED ON TOPSOIL UNLESS APPROVED OTHERWISE. DO NOT PLANT UNTIL ACCEPTANCE OF FINISH GRADE.
3) SOD SHALL BE GROWN ON TOPSOIL UNLESS APPROVED OTHERWISE. SOD SHALL BE 2 YEARS OLD AND STRONGLY ROOTED. PLACE SOD TIGHTLY WITH NO GAPS AND WITH GRAIN IN SAME DIRECTION. SEAMS OF SOD SHALL BE STAGGERED IN A RUNNING BOND PATTERN. SOD SHALL BE WATERED IMMEDIATELY TO AVOID DRYING OUT. DO NOT INSTALL SOD UNTIL ACCEPTANCE OF FINISH GRADE AND IRRIGATION SYSTEM IS OPERATING PROPERLY UNLESS DIRECTED IN WRITING TO DO OTHERWISE. FINISH ROLL SOD WITH A WATER FILLED LAWN ROLLER, ROLL PERPENDICULAR TO LENGTH OF SOD.
4) TURF SHALL BE INSTALLED ON A MIN. OF 3"-4" OF LIGHTLY COMPACTED APPROVED TOPSOIL. TOPSOIL SHALL BE FERTILE, SCREENED, FRIABLE TOPSOIL FREE OF STONES 1/2" IN DIA. AND LARGER, ROOTS, STICKS, OR OTHER EXTRANEOUS MATERIAL INCLUDING NOXIOUS PLANTS. PH BETWEEN 6.0 AND 6.5, SALTS 500 PARTS PPM, ORGANIC CONTENT 3% MIN. DO NOT INSTALL TOPSOIL UNTIL APPROVED BY OWNER/C.M.. TOPSOIL SHALL BE FINE GRADED TO A SMOOTH FINISH, FREE OF LUMPS AND DEPRESSIONS.
5) ALL LANDSCAPE ISLANDS WITHIN PARKING LOTS SHALL BE BACK FILLED WITH TOPSOIL TO A DEPTH OF 18" MIN.

IRRIGATION NOTES:

1) ALL PLANTING AREAS, LAWN AREAS AND LANDSCAPE ISLANDS SHOWN ARE TO HAVE A COMPLETE IRRIGATION SYSTEM. THE G.C. SHALL BE RESPONSIBLE FOR RETAINING A QUALIFIED FIRM FOR THE DESIGN OF THE IRRIGATION SYSTEM. THE DESIGN MUST SHOW HOW THE SYSTEM TIES INTO THE BUILDING AND MUST SHOW ALL OF THE NECESSARY EQUIPMENT FOR A COMPLETE SYSTEM. THE G.C. SHALL SUBMIT THE IRRIGATION SYSTEM DESIGN TO THE ARCHITECT/OWNER FOR APPROVAL PRIOR TO COMMENCEMENT OF WORK.

N

0' 10' 20' 40'

SCALE: 1" = 20'

LEGEND

- EXISTING BITUMINOUS
- EXISTING CONCRETE
- PROPOSED BITUMINOUS (STANDARD DUTY)
- PROPOSED BITUMINOUS (HEAVY DUTY)
- PROPOSED CONCRETE (STANDARD DUTY)
- PROPOSED CONCRETE (HEAVY DUTY)

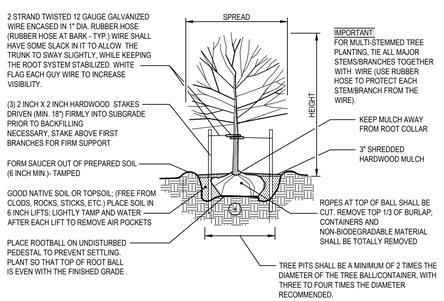

TYPICAL TREE PLANTING DETAIL

N.T.S.

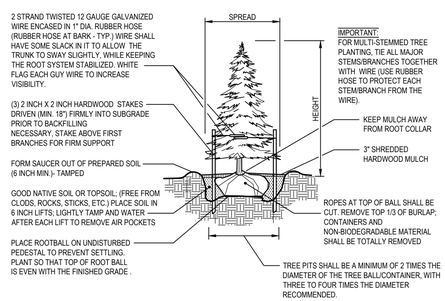

TYPICAL EVERGREEN TREE PLANTING DETAIL

N.T.S.

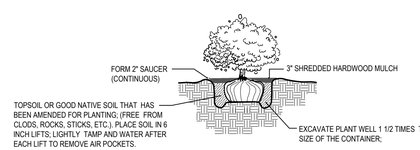

TYPICAL SHRUB / PERENNIAL / ORNAMENTAL GRASS PLANTING DETAIL

N.T.S.

NEDERVELD
www.nederveld.com
800.222.1868
GRAND RAPIDS
217 Grandville Ave., Suite 302
Grand Rapids, MI 49503
Phone: 616.575.5190
ANN ARBOR
CHICAGO
COLUMBUS
HOLLAND
INDIANAPOLIS
ST. LOUIS

PREPARED FOR:

Hudsonville Professional Center LLC
Dr. Brad Dykstra

3250 Central Boulevard
Hudsonville, MI 49426
Phone: 616.669.6600

REVISIONS:

Title: Preliminary PUD Amendment		V. Date: 6/04/18
Drawn: NLM	Checked: JCW	S. Date: 6/04/18
Title: Prelim. PUD Amendment Resub.		V. Date: 7/19/18
Drawn: NLM	Checked: JCW	S. Date: 7/19/18
Title: Township Staff Comments		V. Date: 8/10/18
Drawn: NLM	Checked: JCW	S. Date: 8/10/18

Grand Haven Professional Center

Landscape Plan

15018 172ND AVENUE
PART OF THE NORTHEAST 1/4 OF SECTION 33, T8N, R16W,
GRAND HAVEN TOWNSHIP, OTTAWA COUNTY, MICHIGAN

STAMP:

STATE OF MICHIGAN
JAMES C. WALTER, JR.
LANDSCAPE ARCHITECT
No. 1588
REGISTERED LANDSCAPE ARCHITECT

PROJECT NO:
16201809

SHEET NO:
L-101

16201809-CFI-LANDSCAPE-BASE.dwg NM 8/30/2018 10:43

© 2016 Nederveld, Inc.